adertech

ROYAL 0740-38

MINI LED B-EYE MOVING HEAD

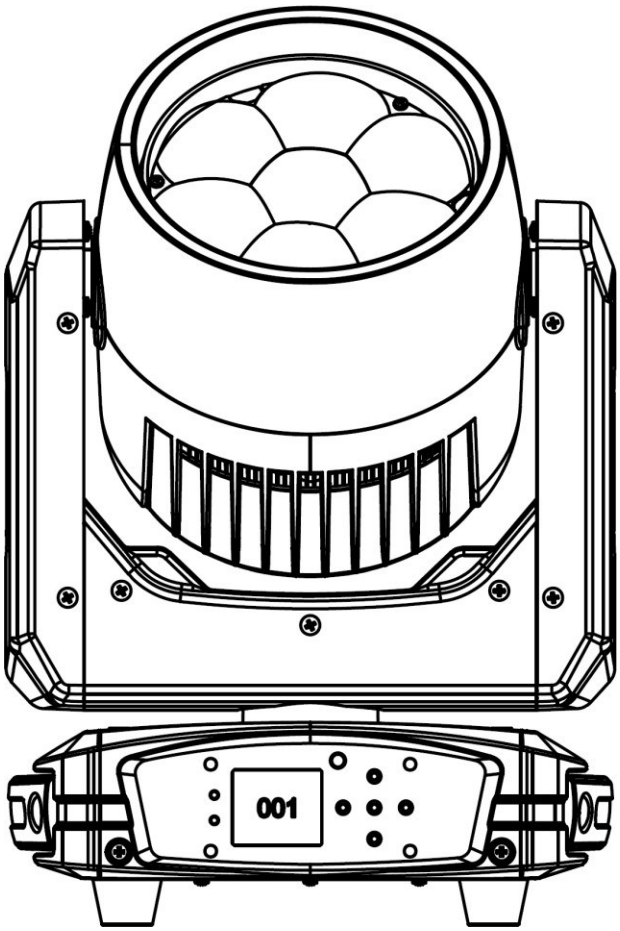

User manual

Catalogue

Chapter	Page
Safe Usage Of The Product	1
Install The Equipment	2
Power Code Connection	3
DMX Connection	3
DMX Terminator	4
Function Set	4
Operation Menu	5
Maintenance	12
Trouble Shooting	12
Keeping The Product Clean	13
Equipment and Appendix	13
Channel List	13
Technical Parameters	15

☆**Important notice:**

· In this instruction for use contains about the installment and the use aspect important information of the moving head. When installing and using, you need to look this usage instruction strictly.

· Before open the moving head and if you want to do the repair work, please make sure the power source is at the separation condition.

· Every unit is tested completely and packed properly by the manufacturer. Please make sure the packing and the unit are in good condition before installation and use. Should there be any damage caused by transportation, consult your dealer and do not use the unit. Any damage caused by improper use will not be assumed by the manufacturer or dealer.

Attention: Unceasingly carries on the product improvement about our company the policy, in this instruction booklet carries the data will have the possibility to be able to change in the future, when no longer separate notice change matters concerned. Our company retains when the product improvement changes the related specification the authority.

SAFE USAGE OF THE PRODUCT

When unpacking and before disposing of the carton, check there is no transportation damage before using the product. Should there be any damage caused by transportation, consult your dealer and do not use the apparatus.
The product is for indoor use only, IP20. Use only in dry locations. Keep this device away from rain and moisture, excessive heat, humidity and dust. Do not allow contact with water or any other liquids.
The product is not designed or intended to be mounted directly on to inflammable surfaces
The product is only intended for installation, operation and maintenance by professional person.
The product must be installed in a location with adequate ventilation, at least 50cm from adjacent wall surfaces. Be sure that no ventilation slots are blocked.
Do not product the beam onto inflammable surfaces, minimum distance is 5m.
Avoid direct exposure to the light from the lamp. The light is harmful to the eye.
Do not attempt to dismantle or modify the projector in any way.
Electrical connection must only be carried out by qualified personnel.
Before installation, ensure that the voltage and frequency of power supply match the power requirements of the projector.
It is essential that each projector is correctly earthed and that electrical installation conforms to all relevant standards.
Do not connect this device to any other types of dimmer apparatus.
Make sure that the power-cord is never crimped or damaged by sharp edges. Never let the power-cord come into contact with other cables. Only handle the power-cord by the plug. Never pull out the plug by tugging the power-cord.
Keep the light clean. Do not touch the light glasss with bare hands.
The product should always be installed with a secondary safety fixing. On the projector base brink, there is a hole for the safety cord provided. It should be attached as shown in “installing the projector” section.
The lens shall be changed if they have become visibly damaged to such an extent that their effectiveness is impaired, for example by cracks or deep scratches.
Exterior surface temperatures of the luminaire after 5 minutes operation is 40° C，when steady state is achieved 50°C.
There is no user serviceable parts inside the projector, do not open the housing and never operate the product with the covers removed.
If you have any questions, don’t hesitate to consult your dealer or manufacturer.

★Always disconnect from the mains, when the device is not in use or before cleaning it or before attempting any maintenance work !

Install The Equipment:

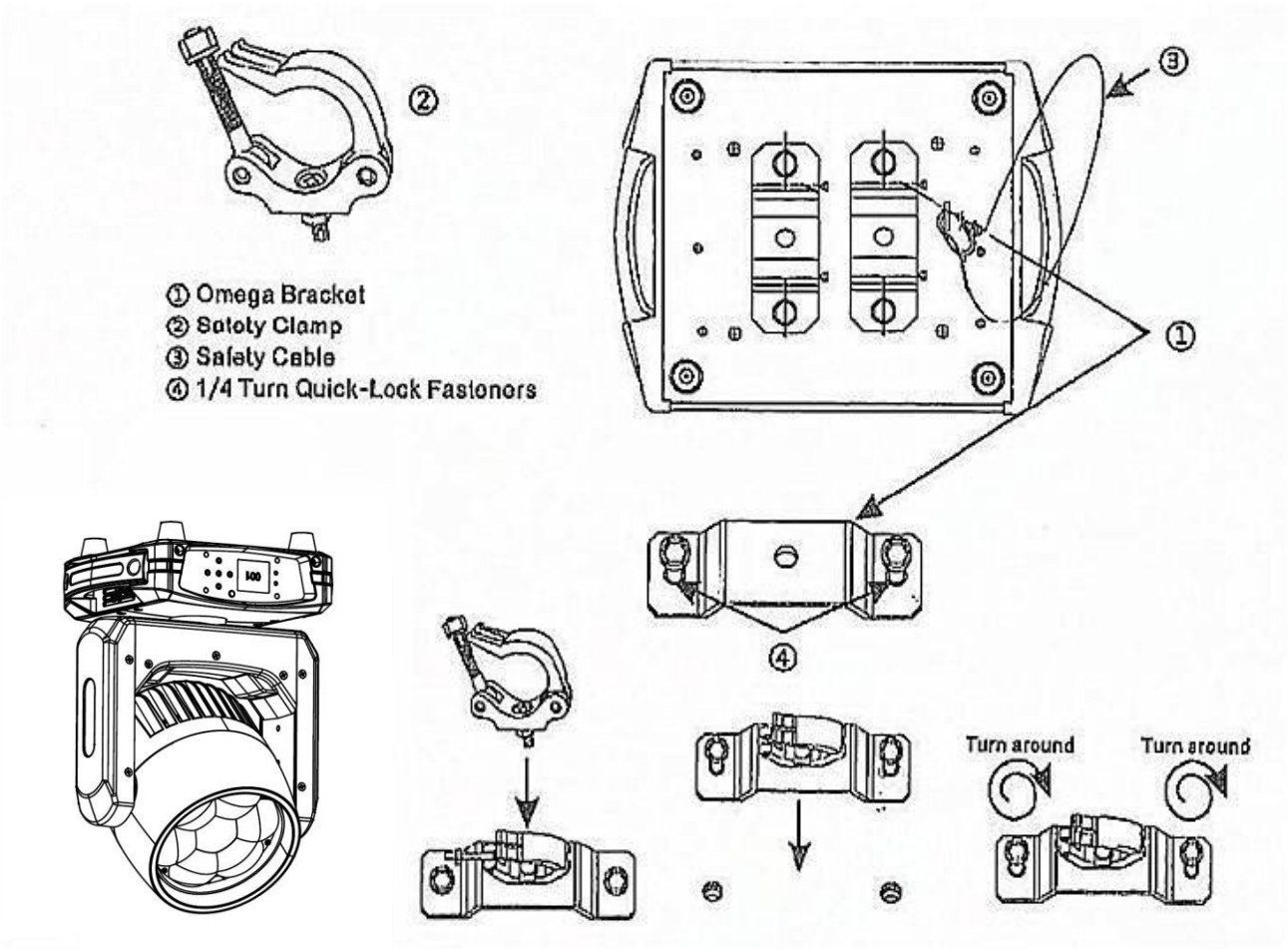

Use 2pcs clamp and 1safety cord(need to purchase).Use clamp fix with light hook which in the packing box with light, then use screw install to the bottom of lamp. Hang the fixture on the structure and fasten the screws attached to each clamp. Make sure the light is installed reliable, and confirm the light which you fixed is strong enough for hanging the light. Base on safety reason, please according to the above picture using safety wire cross the light to make it strong enough again.

Warning!

1. Hook and clamp only use for hanging the light. Do not use clamp as a tool to move fixtures.
2. Base on safety reason, please use the safety cord which can afford the weight ten times of lamp through Insurance hole for auxiliary hanging.
3. Don't use the handle of the moving head light to fixed or lift!

Power Code Connection:

Connect the power cord as follows:

L (live) =brown
E (earth) =yellow/green
N (neutral) =blue

Use the plug provided to connect the mains power to the projector paying attention to the voltage and frequency marked on the panel of the projector. It is recommended that each projector be supplied separately so that they may be individually switched on and off.

★ It is essential that each projector is correctly earthed and the electrical installation conforms to all relevant standards.
★Please do NOT connect the power cable hand by hand over 3pcs.

DMX Connection:

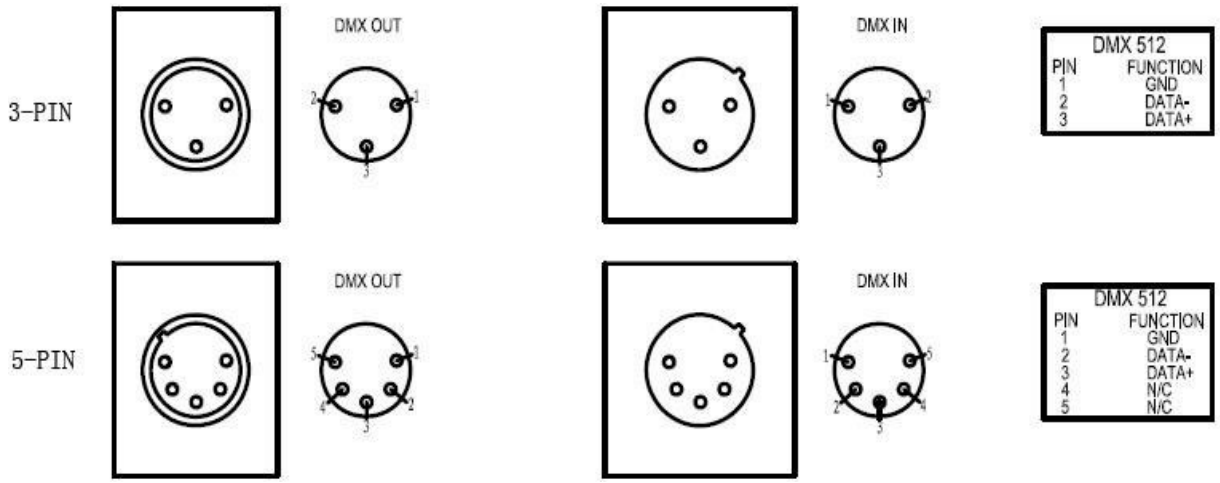

Connection between the controller and a projector and between one projector and another must be made with a 2 core-screened cable, with each core having at least a 0.5mm diameter. Connection to and from the projector is via cannon 3 pin (which are included with the projector) XLR plugs and sockets. The XLR's are connected as shown in the figure above.

Note: Care should be taken to ensure that none of the pins touch the metallic body of the plug or each other. The body of the plug is not connected in any way. The XLED 590 accepts digital control signals in protocol DMX512 (1990).
Connect the controller's output to the first fixture's input, and connect the first fixture's output to the second fixture's input and connect the rest fixtures in the same way. Eventually connect the last fixture's output to a DMX terminator as shown in the figure below.

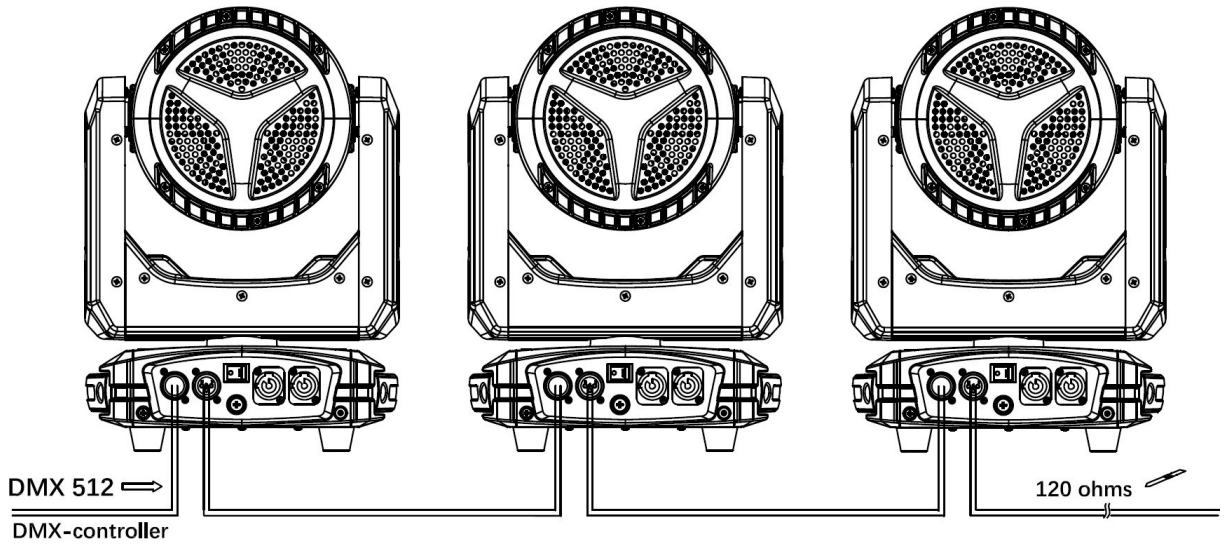

DMX Terminator:

In the Controller mode, at the last fixture in the chain, the DMX output has to be connected with a DMX terminator. This prevents electrical noise from disturbing and corrupting the DMX control signals.

The DMX terminator is simply an XLR connector with a 120Ω (ohm) resistor connected across pins 2 and 3, which is then plugged into the output socket on the last projector in the chain. The connections are illustrated below.

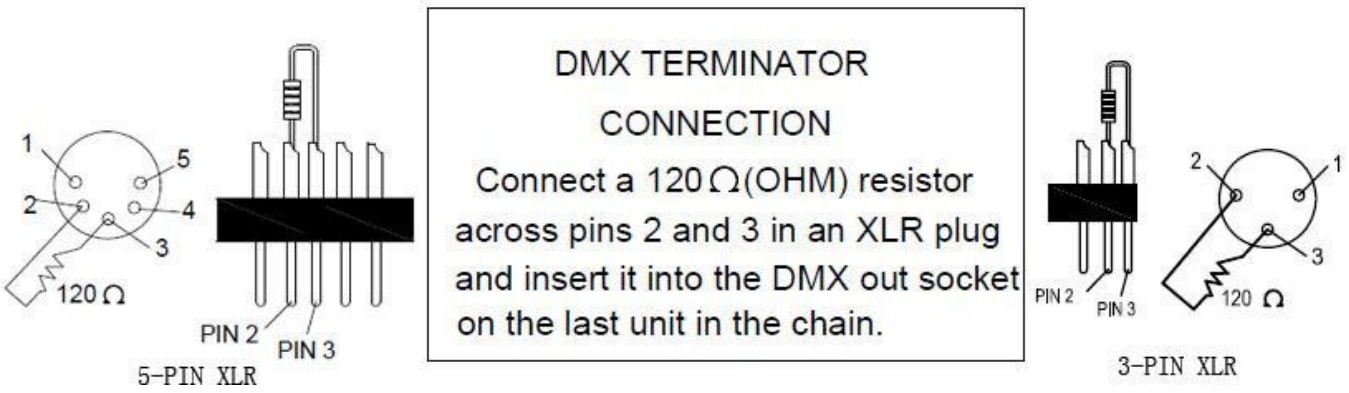

Function Set: (The main board as shown below:)

The light panel diagram show as below picture, above area is Title for fixture description, the black font in the lower right corner shows the fault status of the fixture (when the fault information is not viewed, it displays "ERR", otherwise it displays "NOR"), and the status bar below shows the signal of the current fixture , lamp status, communication status, etc. (the panel in the figure is an example picture and does not represent the real appearance of the product panel， please select a panel of the same type as your product for reference.).

RDM protocol is embed in fixture, user set DMX address via cable using the controller support RDM function. when fixture was search by controller, displayer will echo ‘RDM’ indicate this RDM is work.

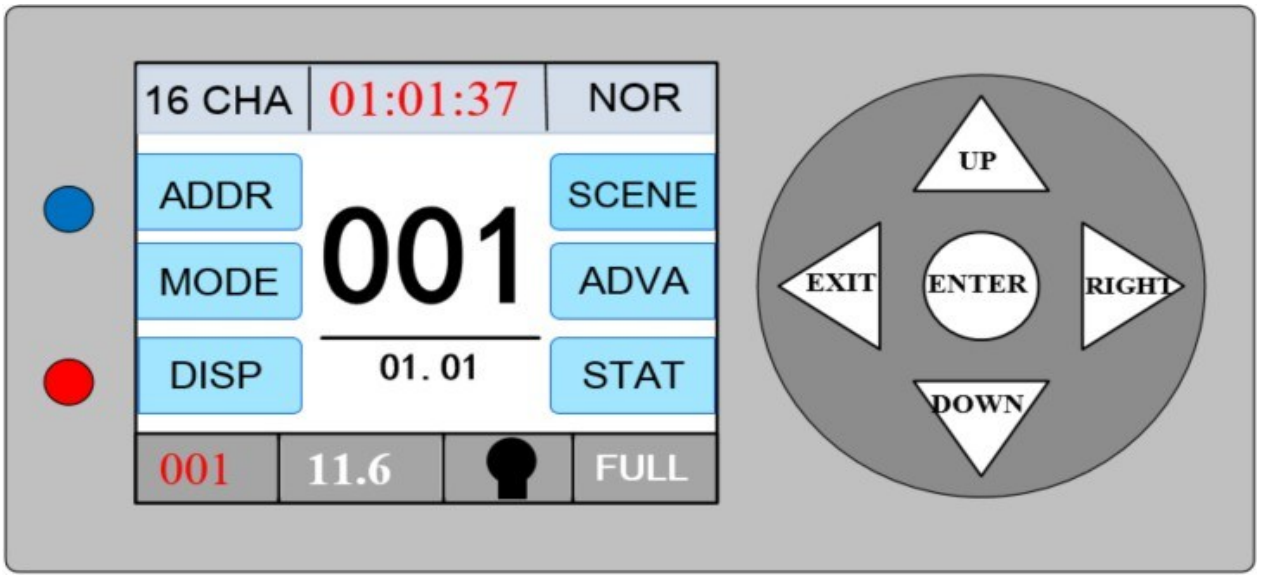

Figure 1 Panel diagram

Note: Prevent damage the touch or TFT displayer, Can not use sharp objects chick displayer.

Operation Menu:

1. **Operate the light with button**
   The left area is TFT Displayer , chick item or value with finger will to complete operation of set light setting(parameters) or view light state.
   The area on the right hand side is 5 KEY, As auxiliary input interface,, the KEY button can been choose to set the parameter.

2. **Parameter value input**
   When the selected parameter item needs to input a value, the window shown in picture will open as below:

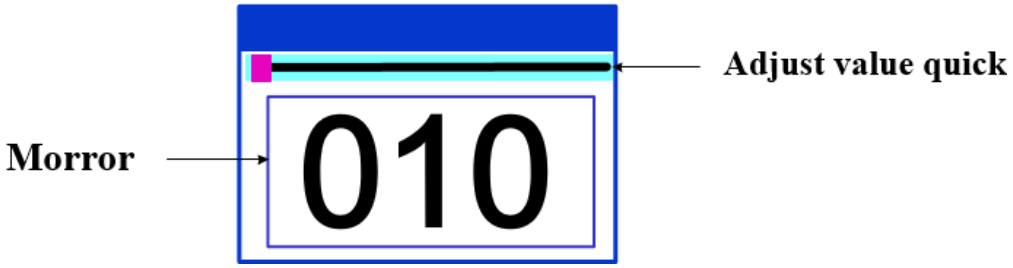

Figure 2 Dialog of value setting

- **Set the value:** you can click the “Up” or “Down” button on the right to set the desired value precisely
- **Application value:** When setting the data with the "Up" or "Down" buttons, the value is sent to the fixture immediately, but the value is not saved.
- **Save the value:** at any time, click the "OK" button, then save the current value to the internal storage. The next time you turn it on, the saved value is applied to the fixture.

3. Set the Boolean parameter

- when the selected parameters is a Boolean value (such as ON or OFF), can directly modify setting by chick corresponding item, the setting will been saved right now.
- When the parameter is a key item, chick corresponding item, a dialog shown in Figure 3 will been popup ask for the confirm. Chick 'sure' to confirm.

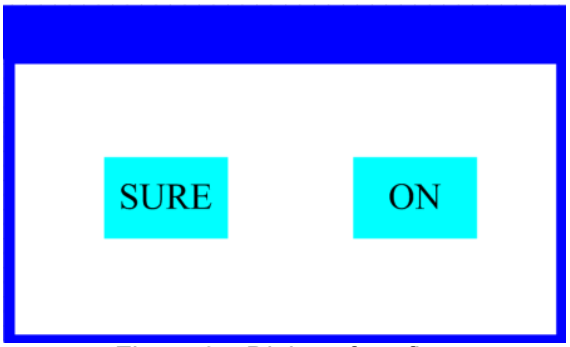

Figure 3 Dialog of confirm

4. Subpage (parameters)

Chick item of main menu, enter corresponding sub menu, shown in, total 6 sub menu, includes class of parameter and status:

- ADDRESS：Set light DMX address.
- WORKMOD：Set light work mode, master or slave mode when in auto run mode.
- DISPLAY： Set display parameter, eg. select language.
- SCENE：Used for test light, modify DMX channel data to test function， the corresponding function of reference channel function table.
- ADVANCE：Set light running parameter.
- STATUS：view light current status.



Figure 6-1 Address setting

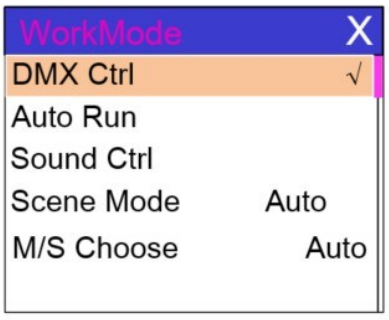

Figure 6-2 Run Settings

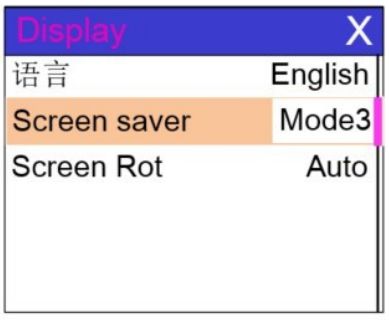

Figure 6-3 Display Settings



Figure 6-4 Scene Settings

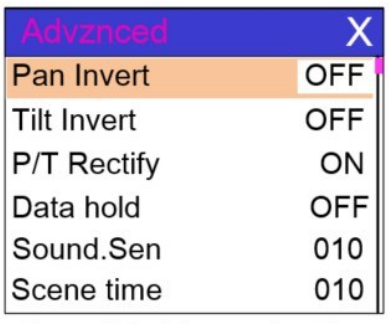

Figure 6-5 Advanced setting

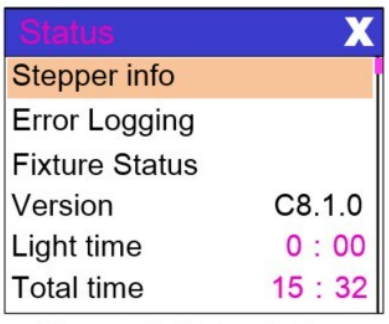

Figure 6-6 Status Settings

5. Function operation and parameter setting

Enter the settings interface, as shown in Figure:

- In the main interface, you can enter the corresponding parameter setting interface by selecting six buttons.
- In the parameter setting interface, you can quickly switch to other setting interface by pressing the blue option on the left.

1. Set the DMX address code

The DMX address, channel mode, etc. of the light can be set through the page shown in Figure 6-1. The menu settings of the light optimize the setting of the address, several settings for address codes are as follows:



- Select “last light” or next light”, the fixture will be based on the current address code and channel data. Automatically calculate the address code of the next or previous station, can be set quickly;
- Click on the address code value, can enter the value editing window, here you can set any valid address code. The light automatically obtains the current DMX channel of the light. Automatically filter unusable address codes (512 - current channel number).
- The light supports the RDM protocol. The fixture address code can be set remotely via RDM. Provide two buttons:
- Channel mode: 24/28/56 channel modes can be choose;

2. Set the light work mode

You can set the light control mode and lamp control by the page shown in Figure 6-2. The light supports 4 control modes (DMX mode, auto running mode, voice control mode and scene mode). For detailed parameter value setting, please refer to the previous section. The specific parameters are described in the following table:

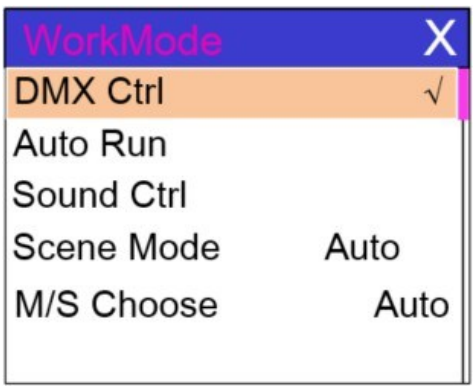

Work Mode

DMX Ctrl	Control mode，receive DMX signal，RDM signal	
Auto Run	The light runs automatically according to the built-in program	
Sound Ctrl	When the luminaire detects a strong sound, the fixture automatically runs a scene in accordance with the built-in program. Otherwise keep the last scene.	
Scene Mode	Run in the set scene mode, support up to 10 scenes of custom editing	
	1~10	Output the specified scene
	Auto	Automatically loops the scene in the set scene time (non-zero), and the scene with time 0 automatically skips the ignore. (**Default**)
M/Schoose	Effective in non-DMX mode, select the mode of data output, The light automatically detects the DMX status and automatically switches the output to prevent data conflicts.	
	Master	The light runs as built-in，If the DMX has no signal, then output data (synchronized), otherwise no data is output
	Slave	The light runs in built-in mode and no output data (not synchronized with other luminaires)
	Auto	If the DMX has no signal, the light operates as built-in. Otherwise, the light works according to the DMX signal. (**Default**)

Scene mode for single or small fixtures, just output a fixed scene, or need to run a simple program, can not be connected to the console, edit it in the scene page.

3. Panel display settings

The light support Chinese and English language, upside down display, etc., enter the corresponding parameter settings as shown in Figure 6-3. The specific menu contents are as follows:



Display mode

Language	Set the displayed language	
	English	English display
	中文	Chinese display
Screen Saver	Set the screen display content or mode after no operation for 30 seconds	
	OFF	Keep the last action page, bright screen
	Mode1	Black
	Mode2	Black screen, showing the address code of the current fixture in the lower left corner.
	Mode3	Display trademark information, address code and operation mode.
	Mode4	Display trademark information, address code and operation mode, which lasts for 30 seconds, black screen.
Screen Rot	Set the display orientation of the screen	
	Forward	Don't reverse display
	Reverse	Reverse display

4. **Scene editing mode**
   Enter the page shown in Figure 6-4(The channel shown in the picture is only an example of the function, please refer to the channel table description in the next section for the specific channel table of this product), and the fixture enters the scene editing mode. For example, under this page, when the [Control Mode] option is turned off, the fixture does not receive DMX console data, and the edited data will effect on the fixture immediately. When it turned on, the console signal is received and the console data is read and reflected on the corresponding channel display.

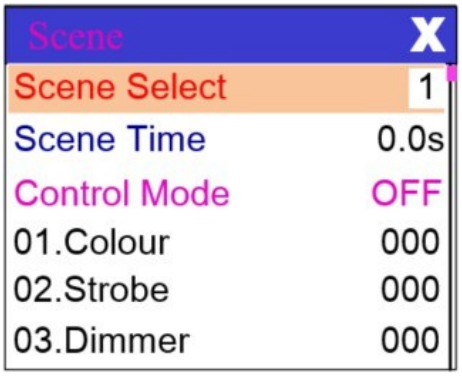

Scene mode

Scene selection	Select the current operation scene	
	1~6	10 scene changes
Scene time	Set the retention time of the current scene when it is automatic, in units of 0.1 seconds.	
	0	The current scene does not participate in automatic scene output
	1-255	0.1 second to 25.5 seconds
Control Mode	Choose whether to use the console to manipulate the settings data	
	OFF	It is not possible to control the console and set the data directly from the current interface
	ON	Using console control, the console data comes first when setting, and the setting is invalid in the current interface
Pan	0-255	Set the data of each channel, and the display content and sequence correspond to the channel table of the light
……	0-255	
……	0-255	
Reset	0-255	

If the reset channel in the scene edits the effective reset data, the fixture will reset, but after reset, the corresponding reset channel value will automatically set 0, preventing multiple consecutive resets.
Looking at this page, you can get the current channel table slot of the fixture. For specific channel data, please refer to the detailed channel description.

5. **Set the working parameters of the light**
   Enter the page shown in Figure 6-5 to adjust the on-site parameters of the light to facilitate on-site installation of the light:

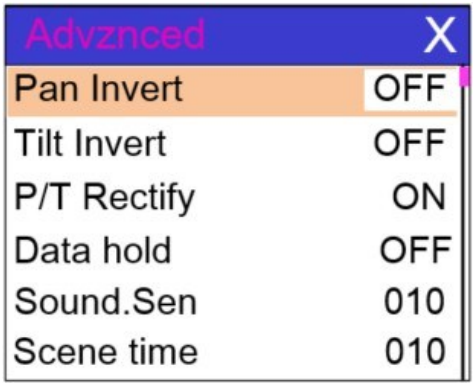

Advanced mode

Pan Invert	Set the Pan rotation direction	
	OFF	Not reversed (Default)
	ON	Reversed
Tilt Invert	Set the Tilt rotation direction	
	OFF	Not reversed (fault)
	ON	Reversed
P/T Rectify	Set whether the luminaire detects P/T out of step and corrects	
	OFF	Uncorrected position after out of step
	ON	Automatically correct position after out of step and record out of step failure (Default)
Pan offset	Set the position of the X-axis zero point of the fixture	
	4-150	4-150
Tilt offset	Set the position of the Y-axis zero point of the fixture	
	4-150	4-150
Data Hold	Set the output status of the light when there is no DMX signal	
	OFF	When no DMX signal, return to middle position.(Default)
	ON	When no DMX signal, stop in the final position
Sound. Sen	Sensitivity when setting the lighting voice control mode	
	1-255	
Scene time	Work with the scene time to determine the scene retention time	
	0-255	Retention time = Scene time * multiple
Reset	Pop up the confirmation box, select "SURE", and reset the fixture.	
Factory Setting	Pop up the confirmation box, select "SURE", and return the lamp parameters to the factory settings.	

When choosing power-on mode, the lamp will wait for 30 seconds after power-on, let the lamp fully start, internal voltage is stable enough, then start the reset program, if the field capacity is stable, recommend power-on mode.
When the fixture cannot calibrate the position, please check whether the "P/T Rectify" is turned off.
When the signal is unplugged, check the Data Hold setting first if the position of the fixture is not output as expected.

6. Check the current status of the fixture

Enter the page shown in Figure 6-6 to view the information and real-time status of the light to know the status of the light. If the light needs to be sold, please provide the status information displayed on the page for judgment. The details are as follows:

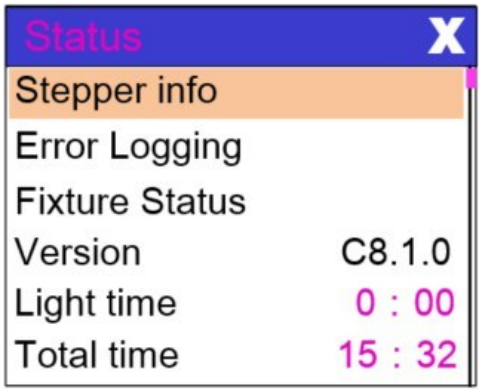

Status information

Motor information	Display information status of all motors and signals in the light	
	Hall	Not displayed, indicating that the motor has no Hall correction, 0 means the motor leaves the calibration position, and 1 means the motor is in the correction position.
	Status	Display motor reset completion status
	Pan	Display real-time position values of Pan
	Tilt	Display real-time position values of Tilt
	Optocoupler	Display the level status of two signals of Pan and Tilt optocouplers, binary
Error Logging	Display the last 8 fault records of the light reset and operation. The fault record is not saved after power off, and the power-on cycle is valid.	
	Fault data	Total number of faults detected after power-on
	12:03	Power-on time when the fault occurred, in minutes
	Hall failure	The motor does not detect a valid Hall signal when the motor is reset.
	Hall short circuit	The Hall signal detected when the motor is reset is always valid.
	Optocoupler failure	No valid optocoupler signal detected for motor reset
	Out of step	Corresponding motor out of step during operation
	Bat	Corresponding to the positioning rod when the motor is reset
	Lamp failure	lamp accidental defoaming
	Sensor failure	Temperature sensor signal is abnormal
	Fan failure	The main fan is not working properly.
Light Status	Display key status data of the current fixture for reference	
	Communication	0~100%, communication quality of the internal data link of the light
	Error count	The number of error frames detected after power-on, cumulative
	Light source temperature	Display the temperature of the current light source, "---" means no detection
	Display panel temperature	Display the temperature of the current display panel or the ambient temperature in the vicinity
	Sensor temperature	Displays the ambient temperature of the current motherboard temperature or motherboard installation location

Version information	Display the information and version of the current luminaire, an important reference for after-sales maintenance (C7.1.0)	
	device	The name of the light, the same as the device information of the RDM
	model	The model of light, the same as the model information of RDM (3in1 bsw move head)
	Display board	Display board firmware version and serial number (PLH B1.0 1.0)
	main board 1	Main board 1 firmware version and serial number (C01B1.10V1.01)
Light time	Record the total accumulated time of the light source on, in minutes, the user manually removes it, as the time reference for regular maintenance of the light source	
Total time	Record the total accumulated time of the lamp on, in minutes, not clear	

Trouble Shooting:

Problem	Answer
The moving head light doesn't switch on.	Check the fuse the power socket Replace the lamp
Although shines, but the moving head lamp doesn't accept the instruction of the controller.	Check the digital start address and also check the connection situation of the communication control line
The moving head lamp only can work intermittently.	Inspect the power supply and voltage is whether normal. Make sure the fan is working well or fans and their filters not blocked
Defective projection	Make sure the lamp is within its life limit Remove dust or grease from the lenses.
The beam appears dim	heck the optics is clean or the lens in good condition (not cracked) Replace with a new lamp of the specified type and rating.

☆**Other maintain work should by the specialist which has the experience to carry on.**

Maintenance:

To prolong the life of the projector, some maintenance work has to be done to ensure the optical system in good condition. If the projector does not function, check the fuses on the power socket of the projector, they should only be replaced by fuses of the same specification. Should these be damaged, call a qualified technician before replacement. The projector has thermal protection device that will switch off the projector in case of overheating. Should either of these operate, check that the fans are not blocked, and if they are dirty, clean them before switching on the projector again. Check that the fans are operational, if not, call a qualified technician.

☆**Any maintenance work should only be carried out by qualified technicians.**

Keeping The Product Clean:

To ensure the reliability of the projector, it should be kept clean. It is recommended that the fans should be cleaned every 15 days. The lens and dichroic colour filters should also be regularly cleaned to maintain an optimum light output.

Do NOT use any type of solvent on dichroic colour filters.

Cleaning frequency depends on the environment in which the fixture operates: damp, smoke or particularly dirty surroundings can cause greater accumulation of dirt on the unit's optics. A soft cloth and typical glass cleaning products should be used for cleaning. It is recommended to clean the external optics at least once every 15 days and clean the internal optics at least once every 60 / 90 days.

☆**Do not use any organic solvent, e.g. alcohol, to clean housing of the apparatus.**

Equipment and Appendix:

- ☆ B-EYE 740R Moving Head Light 1pcs
- ☆ Power Cable 1pcs
- ☆ DMX cable 1pcs
- ☆ Light Hook 2pcs
- ☆ The Product of Instruction 1pcs

Channel List:

Channel			Function	Value	Description
23CH	30CH	58CH			
CH1	CH1	CH1	Pan	0-255	0-540(degree)
CH2	CH2	CH2	Pan Fine	0-255	0-2(degree)
CH3	CH3	CH3	Tilt	0-255	0-270(degree)
CH4	CH4	CH4	Tilt Fine	0-255	0-1(degree)
CH5	CH5	CH5	PT Spd	0-255	Fast to slow
CH6	CH6	CH6	Zoom	0-255	Far to near
CH7	CH7	CH7	Lens Rot	0-127	0-60(degree)
				128-190	Rotate reverse (fast to slow)
				191-192	Stop
				193-255	Rotate forward (slow to fast)
CH8	CH8	CH8	Strobe	0-9	Open
				10-255	strobe slow to fast
CH9	CH9	CH9	Dimmer	0-255	0-100% dimmer
CH10	CH10	CH10	Red	0-255	From dark to light
/	CH11	CH11	Red Fine All	0-255	From dark to light
CH11	CH12	CH12	Green	0-255	From dark to light
/	CH13	CH13	Green Fine All	0-255	From dark to light
CH12	CH14	CH14	Blue	0-255	From dark to light

/	CH15	CH15	Blue Fine All	0-255	From dark to light
CH13	CH16	CH16	White	0-255	From dark to light
	CH17	CH17	White Fine All	0-255	From dark to light
CH14	CH18	CH18	CCT	0-15	None
				16-255	CCT (2800K-8000K)
CH15	CH19	CH19	Colour	0-7	None
				8-15	Colour1
				16-23	Colour2
				……	……
				232-239	Colour29
				240-247	Colour30
				248-255	Colour31
CH16	CH20	CH20	Rotate	0-4	None
				5-9	Fade1
				10-15	Fade2
				……	……
				240-244	Fade48
				245-249	Fade49
				250-255	Fade50
CH17	CH21	CH21	Rotate Spd	0-127	Forward (fast to slow)
				128-255	Reverse (slow to fast)
CH18	CH22	CH22	Back Dimmer	0-255	0-100% dimmer
CH19	CH23	CH23	Back Strobe	0-9	Open
				10-255	strobe slow to fast
CH20	CH24	CH24	Back Red	0-255	From dark to light
CH21	CH25	CH25	Back Green	0-255	From dark to light
CH22	CH26	CH26	Back Blue	0-255	From dark to light
CH23	CH27	CH27	Back White	0-255	From dark to light
CH24	CH28	CH28	SMD LED EFFECT	0-14	No effect
				15-255	Every 5 values change an effect
CH25	CH29	CH29	SMD LED Speed	0-127	Forward flow from fast to slow
				128-255	Reverse flow from slow to fast
CH26	CH30	CH30	Reset	240-255	Reset fixture over 3 second
/	/	CH31	Red1	0-255	From dark to light
/	/	CH32	Green1	0-255	From dark to light
/	/	CH33	Blue1	0-255	From dark to light
/	/	CH34	White1	0-255	From dark to light
/	/	……	……	0-255	From dark to light
/	/	CH55	Red7	0-255	From dark to light
/	/	CH56	Green7	0-255	From dark to light
/	/	CH57	Blue7	0-255	From dark to light
/	/	CH58	White7	0-255	From dark to light

Technical Parameters:

Voltage: AC100V-240V; 50/60Hz
Power Consumption: 300W (220V)
Light source: 7pcs 40W RGBW 4 in 1 LED
30pcs 0.5W RGB 3 in 1 LED
LED Drive Current: 1100mA
LED Lifetime: 30000Hours
Dimmer: 0-100% linear adjustment
Strobe: 0-25/second high speed strobe, but single color Mixes the color strobe
Head Movement: Pan 540°, Tilt 270°, with auto position correction and electronic replacement function.
Pan/Tilt resolution: 8-16 bit
Zoom angle: 4°-50° Linear Zoom function
DMX Channel: 23/26/30/58CH
Control mode: DMX 512, RDM, Auto, Self-test mode, Sound, Master/slave
Control Panel: Colorful LCD screen with 5 buttons, the menu can be set English and Chinese menu
Other function: Lens can be rotation, Each LED can be individual control, low noise cooling fan
IP Grade: IP20
Work Environment Temperature: -20° ~40°C
Net weight:6.5KG
Gross Weight:7.5kg
Product Size: 266x207x356mm
Package Size:460 x 260x 400mm
Product Size below:

