ADERTECH

H2BT-U4H-70A



HDMI over HDBaseT 70 meters Extender
User Manual Version 1.1

Thank you for purchasing this product

We have done everything possible to ensure that our equipment pleases our consumers. When solving any problems in the operation and connection ADERTECH equipment, it is best to contact authorized companies and specialists who work with our equipment. Our equipment is intended for professional use, so you have professional skills in using such equipment. ADERTECH is a manufacturer of a wide range of multimedia solutions

Surge protection device recommended

This product contains sensitive electrical components that may be damaged by electrical spikes, surges, electric shock, lighting strikes, etc. Use of surge protection systems is highly recommended in order to protect and extend the life of your equipment.

Table of Contents

1. Introduction..... 1
2. Features..... 1
3. Package Contents..... 2
4. Specifications..... 2
5. Operation Controls and Functions..... 4
5.1 Transmitter Panel..... 4
5.2 Receiver Panel..... 5
5.3 Audio Signal Output Switching..... 6
5.4 IR Pin Definition..... 7
6. Application Example..... 8

1. Introduction

This HDMI 18Gbps Extender can extend high definition video / audio signal, bi-directional IR and RS-232 signal. The supported transmission distance is up to 131ft / 40 meters for 4K2K@60Hz 4:4:4 resolution and 230ft / 70 meters for 1080P60Hz resolution between transmitter and reciever via a single CAT 5e/6 cable. The transmitter supports ARC function and local audio extract. In addition, the extender is equipped with bi-directional IR pass-through which allows for source and display control. It also supports PoC function.

The extender includes two units: Transmitter and Receiver. The transmitter unit is responsible for capturing HDMI input signal and carrying the signal via one cost effective Cat5e/6 cable. The receiver unit is responsible for receiving the HDMI signal to output.

This extender offers the most convenient solution for HDMI extension via a single Cat5e/6 with long distance capability, and is the perfect solution for any application.

2. Features

- ☆ HDMI 2.0b, HDCP 2.2 / HDCP 1.x and DVI 1.0 compliant
- ☆ Support 18Gbps video bandwidth
- ☆ Video resolution is up to 4k2k@60Hz YUV 4:4:4
- ☆ The maximum transmission distance via a single CAT6a/7 cable:
  230ft / 70 meters for 1080P60Hz resolution;
  164ft / 40 meters for 4K2K@60Hz 4:4:4 resolution
- ☆ Support ARC (Audio Return Channel) function
- ☆ With bi-directional IR, RS-232 and CEC pass-through
- ☆ HDR and Dolby Vision supported
- ☆ Support PoC (Power over Cable) function
- ☆ Compact design for easy and flexible installation

3. Package Contents

Qty	Item
1	4K HDMI over HDBaseT Extender (Transmitter)
1	4K HDMI over HDBaseT Extender (Receiver)
1	IR Blaster cable (1.5 meters)
1	20~60KHz IR Receiver cable (1.5 meters)
1	24V/1A Locking Power adapter
2	3-pin Phoenix connector
4	Mounting Ear
1	User Manual

4. Specifications

Technical	
HDMI Compliance	HDMI 2.0b
HDCP Compliance	HDCP 2.2 / HDCP 1.x
Video Bandwidth	18Gbps
HDMI Input / Output Video Resolution	4K2K 50/60Hz 4:4:4 4K2K 50/60Hz 4:2:0 4K2K 30Hz 4:4:4 1080p, 1080i, 720p, 720i, 480p, 480i All PC resolutions including 1920 x 1200
Extended Distance	70 meters (resolution is up to 1080P60Hz) 40 meters (resolution is up to 4K60Hz 4:4:4)
Color Space	RGB, YCbCr4:4:4, YCbCr4:2:2, YCbCr 4:2:0
Color Depth	8-bit, 10-bit, 12-bit [1080P, 4K30Hz, 4K60Hz (YCbCr 4:2:0)] 8-bit [4K60Hz (YCbCr4:4:4)]
HDMI Audio Formats	PCM2.0/5.1/7.1CH, Dolby Digital/Plus/EX, Dolby True HD, DTS, DTS-EX,DTS-96/24, DTS High Res, DTS-HD Master Audio, DSD

HDR formats	HDR10, HDR10+, Dolby Vision
L/R Audio Formats	PCM2.0CH *Note that If ARC function is on, the audio port will mute.)*
Optical Audio Formats	LPCM2.0, Dolby Digital / Plus, DTS
ESD Protection	IEC 61000-4-2: ±8kV (Air-gap discharge) , ±4kV (Contact discharge)
Connection	
Transmitter	Input: 1×HDMI (IN) TypeA [19-pin female] Output: 1×HDBT [RJ45] 1×L/R Stereo (OUT) [3.5mm Stereo Mini-jack] 1×SPDIF (OUT) [S/PDIF] Control: 1×IR IN [3.5mm Stereo Mini-jack] 1×IR OUT [3.5mm Stereo Mini-jack] 1×RS-232 (OUT) [Phoenix jack] 1×Service [Micro-USB jack]
Receiver	Input: 1×HDBT [RJ45] 1×SPDIF (IN) [S/PDIF] Output: 1×HDMI (OUT) TypeA [19-pin female] Control: 1×IR IN [3.5mm Stereo Mini-jack] 1×IR OUT [3.5mm Stereo Mini-jack] 1×RS-232 (OUT) [Phoenix jack] 1×Service [Micro-USB jack]
Mechanical	
Housing	Metal Enclosure
Color	Black
Dimensions	Transmitter / Receiver:165mm (W)×88.3mm (D)×20mm (H)
Weight	Transmitter: 170g, Receiver: 165g
Power Supply	Input: AC100~240V 50/60Hz Output: DC 24V/1A (Locking connector)
Power Consumption	13W (max)
Operating Temperature	0°C ~ 40°C / 32°F ~ 104°F
Storage Temperature	-20°C ~ 60°C / -4°F ~ 140°F
Relative Humidity	20~90% RH (non-condensing)

Resolution / Cable Length	4K60 - Feet / Meters	4K30 - Feet / Meters	1080P60 - Feet / Meters
HDMI IN / OUT	16ft / 5M	32ft / 10M	50ft / 15M
The use of "Premium High Speed HDMI" cable is highly recommended.			

5. Operation Controls and Functions

5.1 Transmitter Panel

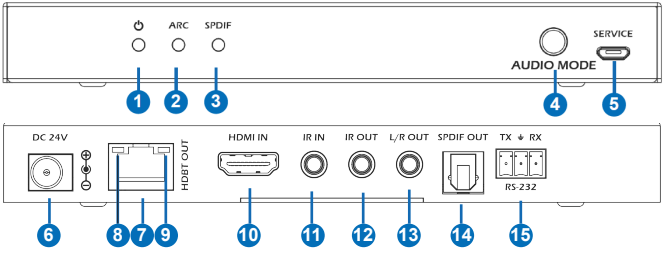

No.	Name	Function Description
1	Power LED	The red LED is on when the unit is powered on.
2	ARC LED	The green LED is on when the ARC function is enabled.
3	SPDIF LED	The green LED is on when SPDIF OUT port outputs the audio signal returned from SPDIF IN on Receiver.
4	SWITCH button	Press the button to switch the output audio signal source for SPDIF OUT port and L/R OUT port.
5	SERVICE port	Firmware update port.
6	DC 24V	DC 24V input port for 24V 1A power supply. **NOTE: that the extender supports PoC function, it means that either transmitter or receiver is connected to 24V/1A power supply, the other doesn't need power supply.**
7	HDBT OUT	RJ45 connector for connecting the HDBT IN port of the Receiver with CAT 5e/6 cable.

No.	Name	Function Description
8	Connection Signal Indicator lamp	▪ Illuminate: Transmitter and Receiver are in good connection status. ▪ Flash: Transmitter and Receiver are in poor connection status. ▪ Dark: Transmitter and Receiver are not connected.
9	Data Signal Indicator lamp	▪ Illuminate: HDMI signal with HDCP. ▪ Flash: HDMI signal without HDCP. ▪ Dark: No HDMI signal.
10	HDMI (IN)	HDMI source input.
11	IR IN	IR input port for receiving the signal of IR remote.
12	IR OUT	IR output port for control of source device. This IR output signal is from IR IN port of the Receiver.
13	L/R OUT	3.5mm stereo connector for stereo audio output.
14	SPDIF OUT	SPDIF connector for optical audio output.
15	RS-232	3-pin Phoenix connector for RS232 command transmission, supporting RS-232 command pass-through between the Transmitter and Receiver.

5.2 Receiver Panel

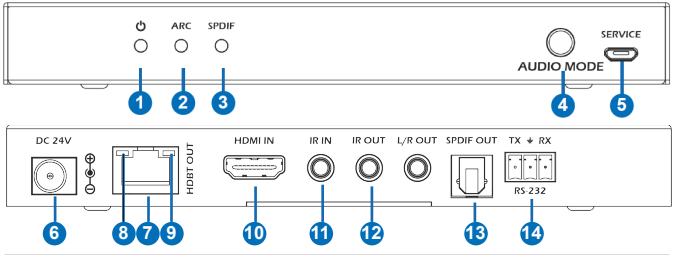

No.	Name	Function Description
1	Power LED	The red LED is on when the unit is powered on.
2	ARC LED	The green LED is on when the ARC function is enabled.

No.	Name	Function Description
3	SPDIF LED	The green LED is on when SPDIF OUT port outputs the audio signal returned from SPDIF IN on the Receiver.
4	SWITCH button	Press the button to switch the output audio signal source for SPDIF OUT and L/R OUT port.
5	SERVICE port	Firmware update port.
6	DC 24V	DC 24V input port for 24V 1A power supply. **NOTE: that the extender supports PoC function, it means that either transmitter or receiver is connected to 24V/1A power supply, the other doesn't need power supply.**
7	HDBT IN	RJ45 connector for connecting the HDBT OUT port of the Transmitter with CAT 5e/6 cable.
8	Connection Signal Indicator lamp	▪ Illuminate: Transmitter and Receiver are in good connection status. ▪ Flash: Transmitter and Receiver are in poor connection status. ▪ Dark: Transmitter and Receiver are not connected.
9	Data Signal Indicator lamp	▪ Illuminate: HDMI signal with HDCP. ▪ Flash: HDMI signal without HDCP. ▪ Dark: No HDMI signal.
10	HDMI OUT	HDMI output for display.
11	IR IN	IR input port for receiving the signal of IR remote.
12	IR OUT	IR output port for control of display device. This IR output signal is from IR IN port of the Transmitter.
13	SPDIF IN	SPDIF connector for optical audio output.
14	RS-232	3-pin Phoenix connector for RS232 command transmission, supporting RS-232 command pass-through between the Transmitter and Receiver.

5.3 Audio Signal Output Switching

Switch the output audio signal source for SPDIF OUT and L/R OUT port via the "SWITCH" button on the panel (the corresponding LED will illuminate). The states of ARC LED and SPDIF LED indicate the audio output logic, as shown in the table below:

ARC LED State	SPDIF LED State	Audio Output Logic
On	Off	The SPDIF OUT, L/R OUT and HDMI IN ports of the Transmitter simultaneously output the audio signal returned from HDMI (display device) on Receiver.
On	On	The SPDIF OUT and L/R OUT ports output the audio signal returned from HDMI (display device) on Receiver.
Off	On	The SPDIF OUT and L/R OUT ports output the audio signal returned from SPDIF IN on Receiver.
Off	Off	The SPDIF OUT and L/R OUT ports output the audio signal extracted from the Transmitter.

NOTE: Short press SWITCH to cycle between modes 1/2/3, long press SWITCH to enter mode 4, and long press again to exit mode 4 to return to mode 1/2/3.

5.4 IR Pin Definition

IR Receiver and Blaster pin's definition as below:

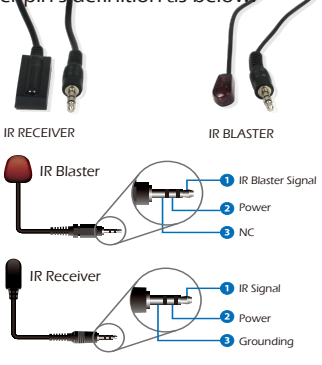

NOTE: When the angle between the IR receiver and the remote control is ± 45 °, the transmission distance is 0-5 meters; when the angle between the IR receiver and the remote control is ± 90 °, the transmission distance is 0-8 meters.

6. Application Example

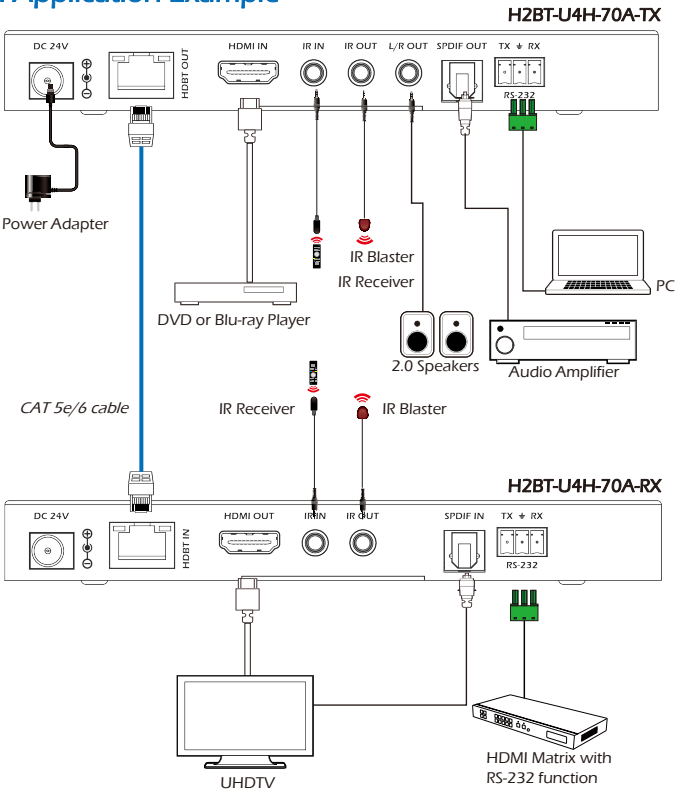

All trademarks are the property of their respective owners. ADERTECH is not responsible for any errors that may appear in this document publication. Product, pricing and feature information contained herein is subject to change without notice.
© 2023 ADERTECH Co Ltd. The ADERTECH logo and associated visual identity are trademarks or registered trademarks of ADERTECH and/or its affiliates.