TRIPLE-4

The TRIPLE-4 20W outdoor waterproof speaker delivers exceptional clarity and powerful bass with its 4"×1 woofer and 0.75"×1 tweeter, covering a frequency response from 90Hz-20kHz. With 85dB sensitivity and a maximum SPL of 98dB, it ensures efficient and dynamic sound projection. Housed in an IP66-rated, all-weather enclosure, it is perfect for reliable performance in any outdoor or indoor environment.



- Specialized in sound quality, featuring a passive radiator and equipped with both tweeter and woofer units to deliver clear, transparent, and bright sound with rich, powerful bass.
- Streamlined design, smooth and elegant curves, stylish and classy outlook.
- Available in black and white, suitable for the decorative styles of different venues.
- Mesh: Made of 1060 pure aluminum, which is hardened and anti-oxidation treated, not easy to deform and never rust.
- Speaker box: Made of polymer engineering plastics, durable, safe and reliable.
- Speaker unit: The tweeter diaphragm is made of transparent silk membrane; the woofer diaphragm is made of polypropylene with large magnetic circuit.
- Mounting bracket: Cast aluminum molding, no oxidation and rust, safe and durable, multi-angle adjustment, easy to install and use.
- Waterproof level: IP66 waterproof level, all-weather design, to ensure the reliable use in indoor and outdoor environments.

Specification:

SKU	**TRIPLE-4**
Type	Wallmount Speaker
Rated Power	20W
Input Options	8Ohm / 100V
Transformer Taps 100V	1.3W / 2.5W / 5W / 10W / 20W
Ways	2
Drivers	4" weatherproof woofer
	0.75” silk tweeter
Effective frequency range	90 - 20KHz
Sound Pressure	98dB
Level Sensitivity	85dB, measured at 1W/m
Waterproof degree	IP66
Material	ABS enclosure, aluminum grille & aluminum mounting bracket
Operating Temperature	-20℃~+50℃
Finished colour	White (TRIPLE-4W), Black (TRIPLE-4B)
Mounting bracket	Included
Dimension	213x140x159 mm (without bracket)
Weight	2.4kg

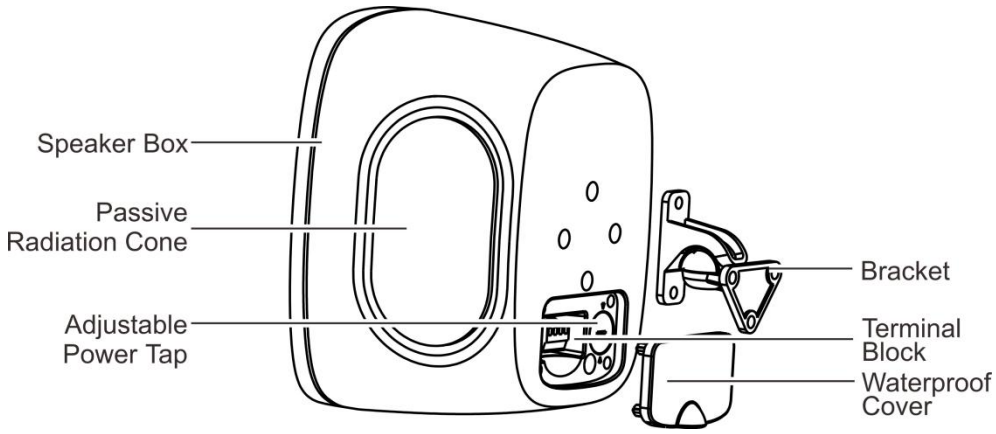

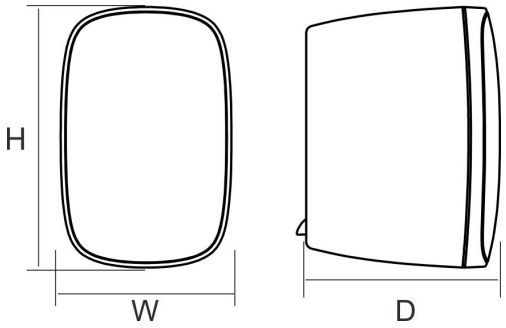

H	W	D
213mm	140mm	159mm

Frequency Response

(dB SPL, 1W, 1m)

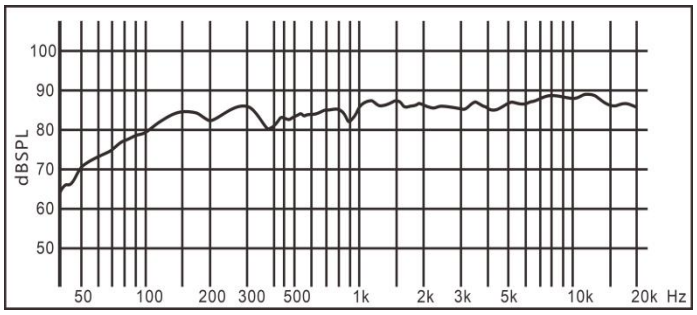

Distortion

(THD<3% 1W, 1m, 100Hz-10kHz)

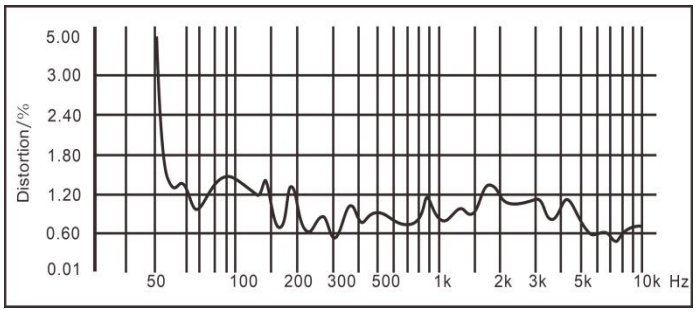

Vertical Directivity Pattern

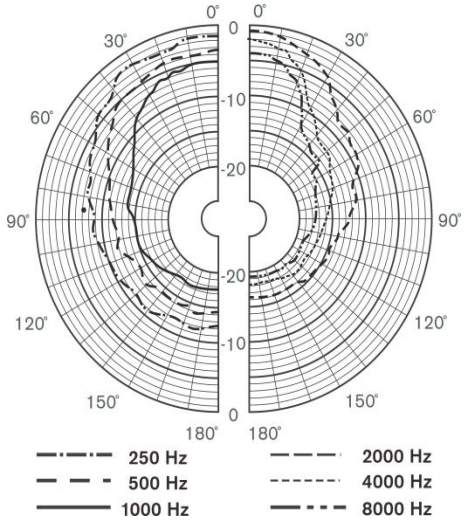

Horizontal Directivity Pattern

