adertech

TSID Series

Wireless Infrared Distribution Language Interpretation System



User Manual

Table of Contents

1 Introduction 3
2 Features 3
3 Package Contents 3
4 TSID Main Unit 4
4.1 Front and Rear Panels View 4
4.2 TSID unit's features 4
4.3 TSID Interfaces 4
4.4 TSID Specification Package 5
4.5 Contents 5
5 TSID-VI Infrared radiator 6
5.1 Front and Rear Panels View 6
5.2 TSID-VI unit's features 6
5.3 TSID-VI Interfaces 6
5.4 TSID-VI Specification 7
5.5 Package Contents 7
6 TSID-CI Interpreter console 8
6.1 Front and Rear Panels View 8
6.2 TSID-CI unit's features 8
6.3 TSID-CI Interfaces 8
6.4 TSID-CI Specification 9
6.5 Package Contents 9
7 TSID-IDR Infrared receiver 10
7.1 Front and Rear Panels View 10
7.2 TSID-IDR unit's features 10
7.3 TSID-IDR Interfaces 10
7.4 TSID-IDR Specification 11
7.5 Package Contents 11
8 TSID-BC Charging Station 12
8.1 Front and Rear Panels View 12
8.2 TSID-BC unit's features 12
8.3 TSID-BC Interfaces 12
8.4 TSID-BC Specification 13
8.5 Package Contents 13
9 System Installation 14
9.1 System Connection Diagram 14
9.2 Safety Warnings 14
10 System Planning 16
10.1 Aspects of infrared distribution systems 16
10.2 Directional sensitivity of the receiver 16
10.3 The footprint of the radiator 17
10.4 Position of the radiator 18
10.5 System configuration 20
10.6 Transmitter installation and connection 20
10.7 Installation of radiator 22
10.8 Installation of interpreter console 23
10.9 Installation of infrared receiver 24
10.10 System setting and operation 25
11 Troubleshooting 28
12 Best Practice 29
13 Safety Instructions 29
14 Warranty Information 29

1. Introduction

ADERTECH TSID series is an IR language distribution system for wireless distribution of audio signals via infrared radiation. It can be used in a simultaneous interpretation system for international conferences where multiple languages are used. To enable all participants to understand the discussion, interpreters simultaneously translate the speaker's language as required. These interpretations are distributed throughout the conference venue, and delegates select the language of their choice and listen to it through headphones. The system can also be used for music distribution. The main TSID-xx unit acts as infrared signal transmitter, there are several models with different number of audio channels (from 4 to 12) are available. TSID-xx is equipped with universal power supply with wide range input voltages support from 115 to 230V. Unit housed in the robust metal chassis and ready to mount into the standard 19" Rack.

Infrared radiator TSID-VI is used to send audio signals from the main unit over wireless channels to the Receivers. The radiators can be mounted on walls, ceilings or floor stands. The radiator support up to 12 channels audio transmission. Up to 30 radiators could be connected in the daisy-chain. The TSID-STAND tripod is an optional accessory.

The TSID-IDR is an Infrared receiver. These multi-channel infrared receivers support up to 12 audio channels. The receivers operate using the rechargeable NiMH batteries the charging function and circuitry is incorporated in the receiver. It is possible to use standard disposable batteries. The TSID-IDR-H1 personal mono earphone is an optional accessory.

The interpreter audio signals come from the Interpreter console TSID-CI. Consoles support up to 12 audio channels. The detachable microphone with 41 cm long gooseneck comes in the set. The Interpreter could control many of system functions using console built-in LCD and buttons. Optional TSID-CI-H headset could be easily connected.

2. Features

- Easy installing and scaling wireless distribution system
- Up to 12 audio channels depending on model
- Infrared Based – no Restriction for working range
- Integrated wide range AC power supply
- Receiver uses standard batteries rechargeable on disposable
- Smart function for Interpretation

3. Package Contents

System components have their individual packages and come with complete set items for easy and fast system start. Many of additional accessories are available on demand for each part of the system. Please ask you local ADERTECH distributor for the prices, details, item list and their function available for your Region.

4. TSID Main Unit

4.1 Front and Rear Panels View



4.2 TSID unit's features

- Infrared Transmitter Unit – up to 12 channels depending on model
- 1.7 – 4 MHz frequency band eliminates disturbance from all types of lighting systems
- Up to 30 Infrared Radiators could be connected in daisy-chain on each HF output
- Audio Line Inputs and Outputs for easy system integration and scaling
- High secure transmission, prevent external interference
- Elegant configuration in accordance to ergonomics
- LED indicators for power status and separate signal level for each channel
- Integrated wide range AC power supply
- Ready to 19" Rack mount, 2RU Chassis

4.3 TSID Interfaces

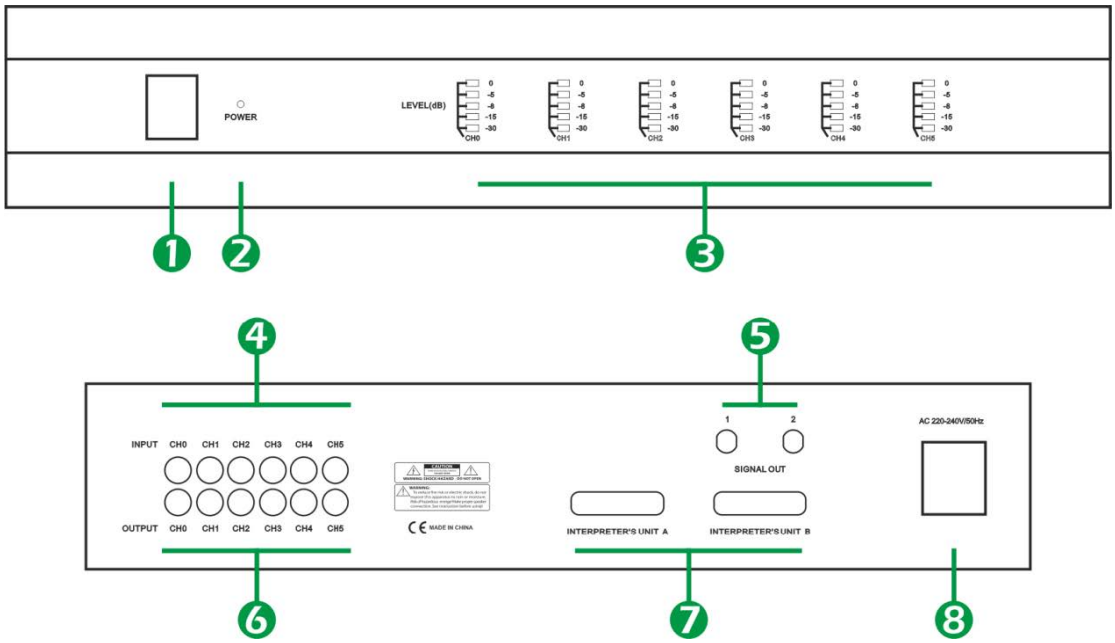

N	Description	N	Description
1	AC Power Mains Switch	5	Infrared radiator outs, BNC connectors
2	AC Power LED	6	Audio Outputs, RCA connectors
3	Output channels signal's levels indicators	7	Interpreter Console connectors, DB25 AC
4	Auxiliary Audio Inputs, RCA connectors	8	Power Socket

4.4 TSID Specification

SKU	**TSID-xx** (where xx is number of audio channels)
Type	Multi Channel Audio Infrared Transmitter
Audio	
Frequency Response	100Hz – 14KHz (-3dB)
Signal/Noise Ratio	>80dB
THD	<0.5% (@1kHz)
Crosstalk Attenuation	>80dB
Dynamic Range	>80dB
Infrared	
IR Range	Carriers 0 to 11: 1.7 to 4MHz
IR Modulation	Digital PLL
Interfaces	
Inputs	
Auxiliary Line Audio	4x -12x (depending on model), unbalanced audio, mono, RCA connector
Audio Level	+3dBV
Audio Level MAX	+6dBV (+6dB)
Interpreter Console	2x, DB-25pin female connector
Outputs	
Line Audio	4x -12x (depending on model), unbalanced audio, mono, RCA connector
RF	700mV, 50Ohm
HF	2x 1Vpp, 6VDC, 50Ohm, for Infrared Radiators, BNC connector
Control	
Local	Front Panel Power Switch
Indication	Power, Signal Levels LED Status
Electrically	
Power Consumption	40W
Power Supply	Internal, switching, AC 110 / 230V, 50/60Hz
Mechanical	
Housing	Metal Enclosure
Color	Black
Dimensions (LxWxH)	485 x 355 x 90 mm
Weight	8.0 kg
Environments	
Operating Temperature	0°C ~ 40°C
Storage Temperature	-20°C ~ 70°C
Relative Humidity	10%~90% RH (non-condensing)

4.5 Package Contents

1x TSID Transmitter Unit
1x AC Power Cord
1x User Manual

5. TSID-VI Infrared radiator

5.1 Front and Rear Panels View



5.2 TSID-VI unit's features

- Radiates and distributes up to 12 channels of audio signal
- Convection cooled for noiseless, reliable operation
- Powerful compression techniques enable efficient, low-loss transmission
- Mounted on ceiling, wall, floor stand or optional tripod
- Easily daisy-chained together to expand coverage
- The Angle of half intensity is ±22°
- Loop through input for connecting the IR radiators in the daisy-chain
- Optional signal delay control for long cables compensation

5.3 TSID-VI Interfaces

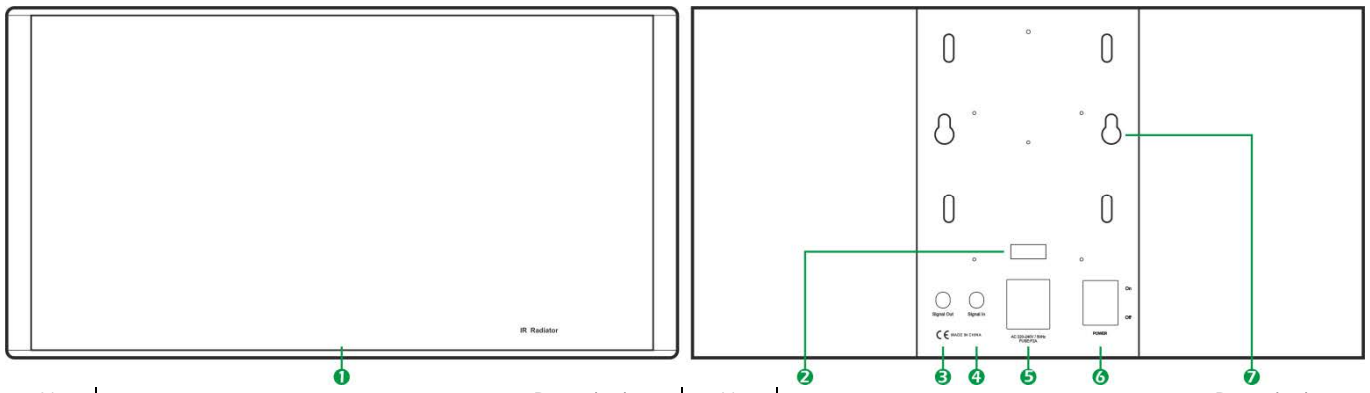

N	Description	N	Description
1	Infrared LEDs and IR lens field	5	AC Power Socket
2	Delay Settings Switch (optional)	6	AC Power Mains Switch
3	IR signal HF Input, BNC connector	7	Mounting Holes
4	IR signal HF Output, BNC connector		

5.4 TSID-VI Specification

SKU	TSID-VI
Type	Multi Channel Audio Infrared Radiator
Infrared	
Number of IREDs	312
Total Optical Peak	24 W/sr
Angle of Half Intensity	±22°
Transmission distance	Up to 30 meters for 12 channel system
Interfaces	
Inputs	
HF	1x 1Vpp (10mVpp MIN), 50Ohm, BNC connector
Outputs	
HF	1x 1Vpp, 6VDC, 50Ohm, BNC connector
Control	
Local	Rear Panel Power Switch, Delay Settings DIP switch
Indication	Power LED Status
Electrically	
Power Consumption	30W
Power Supply	Internal, switching, AC 110 / 230V, 50/60Hz
Mechanical	
Housing	Metal Enclosure
Color	Black
Dimensions (LxWxH)	445 x 235 x 113 mm
Weight	4.2 kg
Environments	
Operating Temperature	0°C ~ 40°C
Storage Temperature	-20°C ~ 70°C
Relative Humidity	10%~90% RH (non-condensing)

5.5 Package Contents

1x TSID-VI Unit
1x AC Power Cord
1x User Manual

6. TSID-CI Interpreter console

6.1 Unit View



6.2 TSID-CI unit's features

- Up to 12 Channel audio signals transmitted over a dedicated cable
- No additional power supplies are needed, console powered by the Main Unit
- Voice adjustable and with prevention on feedback
- Feedback function to delegates to request for slower the speaking speed
- Mute button as prevention on interpreter's cough
- System adjusting using base with built-in LCD and buttons

6.3 TSID-CI Interfaces

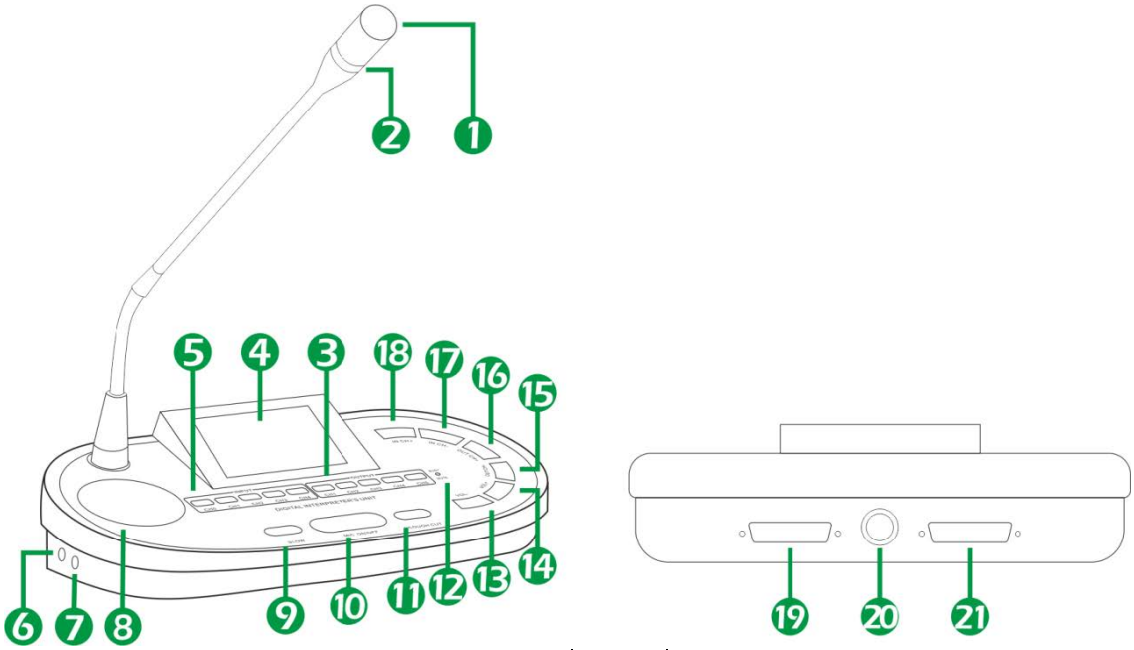

N	Description	N	Description
1	Unidirectional Electret Microphone	12	Channel **BUSY/MUTE** Indicator
2	Microphone activity Red Ring Indicator	13	**VOL–** Button, decrease Input Volume
3	Output Channels 1-5 Fast Key Selection	14	**VOL+** Button, increase Input Volume
4	LCD Display	15	**OUT CH–** Button, output number decrease
5	Input Channels 0-4 Fast Key Selection	16	**OUT CH+** Button, output number increase
6	External Microphone Port, mJack 3.5	17	**IN CH–** Button, input ch number decrease
7	Headphones Port, mJack 3.5	18	**IN CH+** Button, input ch number increase
8	Built-in Speaker	19	Input Audio Bus, DB25 connector
9	**SLOW** Button, Request to Delegate	20	Alternative Audio Bus, DIN13 connector
10	**MIC ON/OFF** Button, Microphone Control	21	Output Audio Bus, DB25 connector
11	**COUGH CUT** Button, Mute Microphone		

6.4 TSID-CI Specification

SKU	TSID-CI
Type	Interpreter Console Base with Microphone Gooseneck
Audio	
Frequency Response	50Hz – 20KHz (-3dB)
Sensitivity	-42 (±2dB)
Microphone	
Capsule Type	Electret
Diagram	Unidirectional
Gooseneck length	410 mm
Interfaces	
Inputs	
External Microphone	1x mJack 3.5mm
Audio Bus	1x DB 25-pin connector
Outputs	
Headphones	1x mJack 3.5mm
Audio Bus	1x DB 25-pin connector
Alternative Bus	1x DIN 13-pin connector
Control	
Local	Menu on Built-in LCD, Console Base Buttons
Indication	Microphone Activity, Mute/Busy LEDs
Mechanical	
Housing	ABS Plastic
Color	Dark Grey
Dimensions (LxWxH)	280 x 140 x 75 mm
Weight	1.4 kg
Environments	
Operating Temperature	0°C ~ 40°C
Storage Temperature	-20°C ~ 70°C
Relative Humidity	10%~90% RH (non-condensing)

6.5 Package Contents

1x TSID-CI Console Base
1x Microphone gooseneck
1x Audio Base Interface patch cord 1x
User Manual

7. TSID-IDR Infrared receiver

7.1 Unit View



7.2 TSID-IDR unit's features

- Pocket size wireless handheld unit
- Accommodates up to 12 different languages
- Channel selector and headphone connector
- Power on/off switch and volume level control
- Powered by (3x AAA) rechargeable batteries
- Battery Cover could be locked by key
- Belt holder provided
- Aluminum carrying cases provided for receivers

7.3 TSID-IDR Interfaces

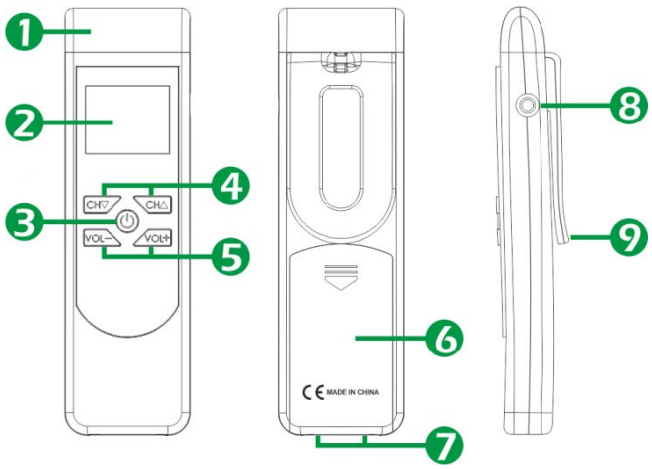

N	Description	N	Description
1	IR Lens and Photodiodes	6	Battery Lock Cover, with locking option
2	Built-in LCD	7	Battery Charging Contacts
3	On/Off Button	8	Headphones Port, mJack 3.5
4	Channel Selection Buttons	9	Belt Holder
5	Volume Control Buttons		

7.4 TSID-IDR Specification

SKU	TSID-IDR
Type	Audio Infrared Receiver Unit
Infrared	
Receiving sensitivity	–101dBM
Angle of Half Intensity	±50°
Audio Output	
Frequency Response	20Hz – 10KHz
Signal/Noise Ratio	78dB(A)
Frequency Response	20Hz – 10KHz
Interfaces	
Headphones Outputs	
Connector	1x 32Ohm, mJack 3.5mm
Output Level	450mVrms (@2.4V with 32Ohm Headphones)
Control	
Local	Built-in LCD, Power, Volume and Channel Selection Buttons
Indication	Link and Battery Status, Volume and Channel
Electrically	
Power Consumption	60mA, 3V
Supply Voltage	3.6V (3.0V nominal)
Power Source	3x 1.2V Batteries AAA (rechargeable NiMH or disposable)
Mechanical	
Housing	ABS Plastic
Color	Dark Grey
Dimensions (LxWxH)	155 x 47 x 24 mm
Weight	0.08 kg (without batteries)
Environments	
Operating Temperature	0°C ~ 40°C
Storage Temperature	-20°C ~ 70°C
Relative Humidity	10%~90% RH (non-condensing)

7.5 Package Contents

1x TSID-IDR Infrared Receiver Unit
3x Rechargeable NiMH 1.2V Batteries AAA 1x
User Manual

8. TSID-BC Charging Station

8.1 Unit View



8.2 TSID-BC unit's features

- Charging station is suitable for mobile or permanent application
- It can recharge up to 24 receivers at once
- Independent charging circuit integrated in each receiver
- Checks if a batteries is present and control on the charging process

- Built-in charging power supply with automatic input voltage selection TSID-

8.3 BC Interfaces

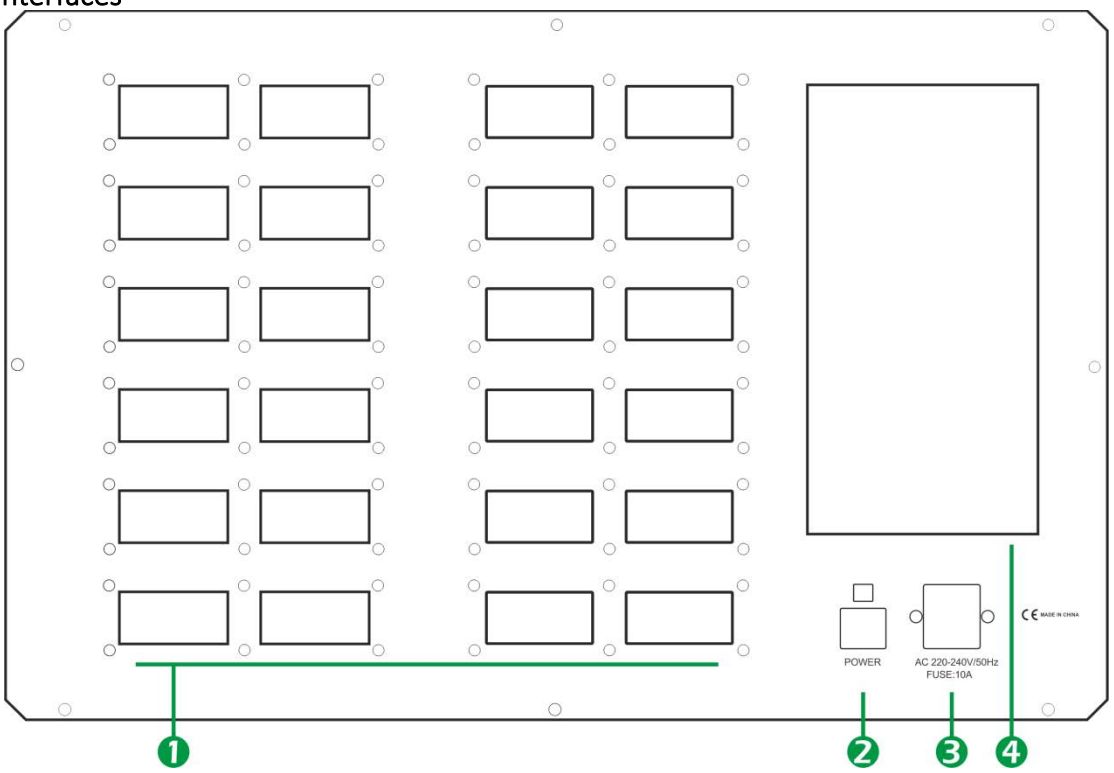

N	Description	N	Description
1	24x IR Receivers Charging Slots	3	AC Power Socket
2	AC Mains Power Switch	4	AC Power Cable and Batteries Storage

8.4 TSID-BCSpecification

SKU	TSID-BC
Type	IR Receivers Charging Station
Capacity	24 Slots
Charging Current	220mA (Maximum)
Charging Time	Up to 2.5 Hours
Control	
Local	Front Panel Power Switch
Indication	Power and Charging LED Status
Electrically	
Power Consumption	66W
Power Supply	Internal, switching, AC 110 / 230V, 50/60Hz
Mechanical	
Housing	Aluminum, Metal, ABS Plastic and composite materials
Color	Black
Dimensions (LxWxH)	630 x 370 x 290 mm
Weight	10.5 kg
Environments	
Operating Temperature	0°C ~ 40°C
Storage Temperature	-20°C ~ 70°C
Relative Humidity	10%~90% RH (non-condensing)

8.5 Package Contents

1x TSID-BC Charging Station Unit 1x
AC Power Cord
1x User Manual

9. System Installation

9.1 System Connection Diagram

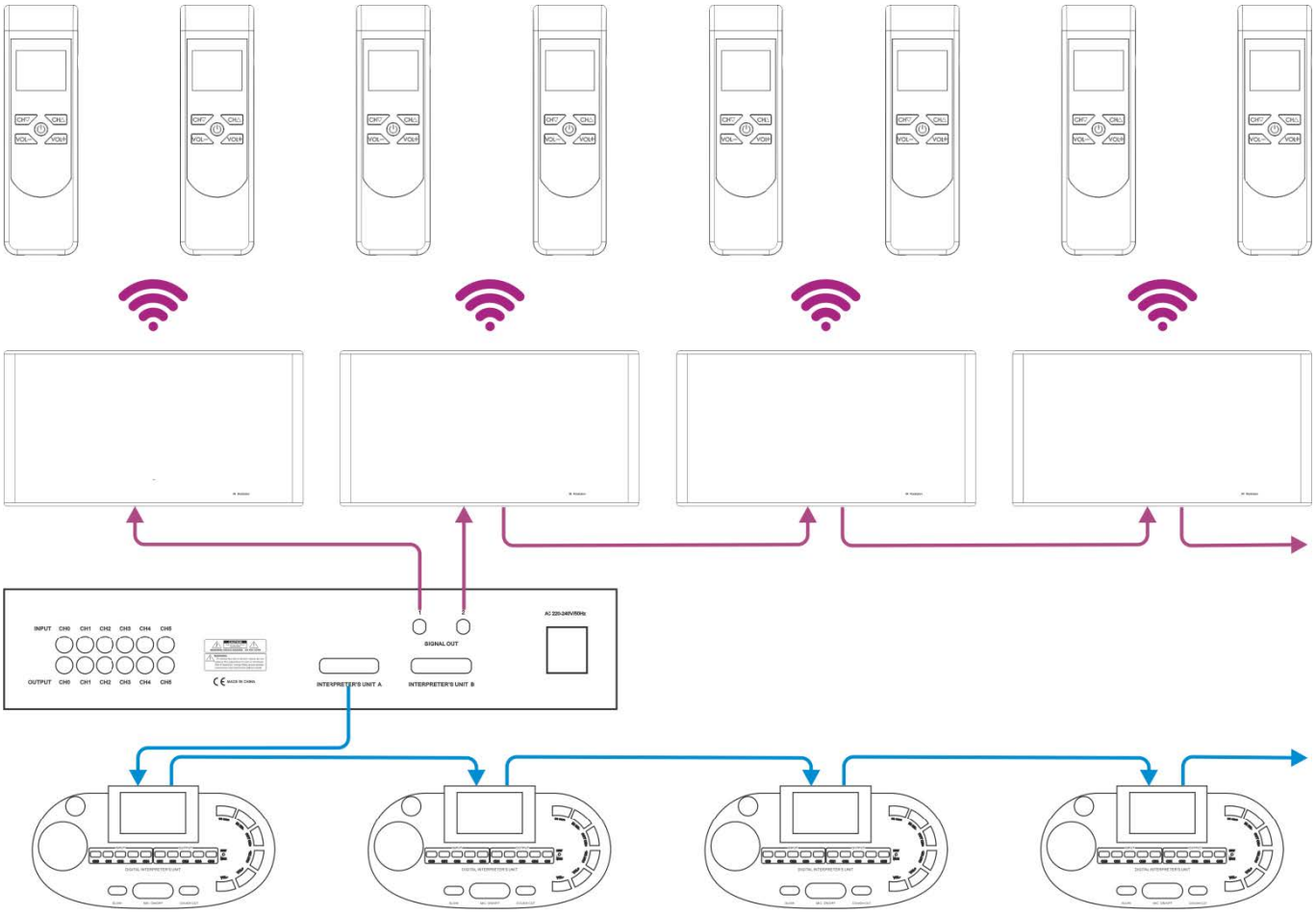

9.2 Safety Warnings

- If the units demonstrate any problems, such as abnormal sound, smoke, heat from or damage to power cables, disconnect the power plug from the outlet and contact your sales representative.
- If the power plug blades are distorted or discolored, do not use the unit. (Transmitter, IR radiator, Battery charger).
- Uncoil the power cables before use, Do not bundle the cables during use, or fie with nails (Transmitter, IR radiator, Battery charger).
- Do not pull on the cable. Hold the plug section and insert/remove it in a straight line, damaged cables may result in electric shock, malfunction, or fire (Transmitter, IR radiator, Battery charger).
- Do not place anything on the power cables. Do not route them under a rug or furniture (Transmitter, IR radiator, Battery charger).
- Do not cover the units with cloth or place them in locations with poor ventilation.
- Doing so traps heat, and may result in electric shock or fire
- If you do not use the units for long periods of time, disconnect the power plugs from the outlet (Transmitter, IR radiator, Battery charger).
- Do not disassemble the units. Touching the inside of the units may result in electric shock.
- Do not expose the units to any strong shock.

- Do not expose the units to direct sunlight, heat from heating appliances, high temperatures, or dust.
- Do not expose the units to high humidity or moisture. Water that accidentally enters the inside of the units may result in electric shock, malfunction, or fire.
- Do not touch the power cables or plugs with wet hand (Transmitter, IR radiator, Battery charger).
- Transmitter, IR radiator, Battery charger is a class I device. Be certain to connect to an AC outlet with a protective grounding connection.
- Transmitter, IR radiator, Battery charger can be separated from the AC receptacle by turning off the unit by the power switch. In case of emergency, turn off this switch or unplug the power cable from the AC receptacle.

CAUTION on handling of the receiver unit

- Do not drop the unit
- If you do not use the unit for long periods of time, remove the battery
- The dedicated battery should be used
- Do not cover the infrared section

CAUTION on installation radiator

- After mounting the IR radiator, be certain that they are securely fastened
- Do not install the IR radiator near infrared-emitting objects such as direct sunlight, incandescent lamps, halogen lamps, inverter fluorescent lamps, or plasma displays
- Noise may be generated by interference regardless of the operating distance between the IR radiator away from infrared-emitting objects
- Do not place any obstructions around the radiator

CAUTION on battery charger handling

- If the charging terminal is dirty, poor contact will prevent the battery from being charged properly.
- Periodically clean the charging terminals
- The battery charger may become hot during charging. Use it in a well-ventilated area
- After the battery is fully charged, turn off the battery charger or remove the receivers

10. System Planning

The system is based on transmission by modulated infrared radiation. Infrared radiation forms part of the electromagnetic spectrum, which is composed of visible light, radio waves and other types of radiation. It has a wavelength just above that of visible light. Like visible light, it is reflected from hard surfaces, yet passes through translucent materials such as glass. The infrared radiation spectrum in relation to other relevant spectra is shown in the next figure.

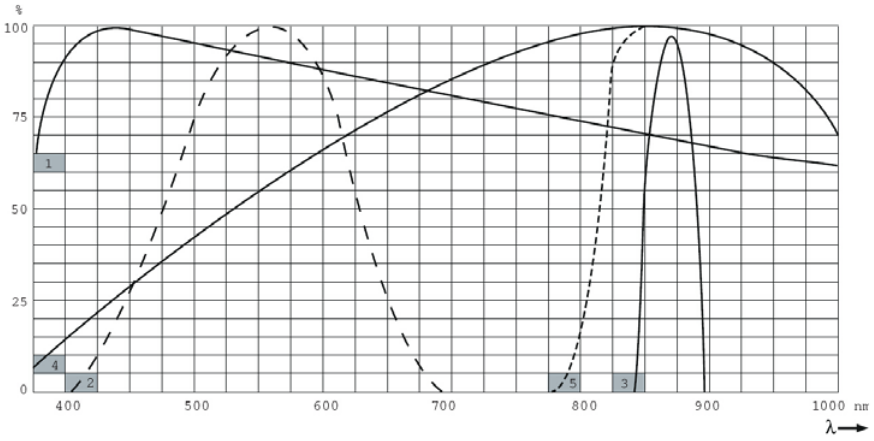

10.1 Aspects of infrared distribution systems

A good infrared distribution system ensures that all delegates in a conference venue receive the distributed signals without disturbance. This is achieved by using enough radiators, placed at well planned positions, so that the conference venue is covered with uniform IR-radiation of adequate strength. There are several aspects that influence the uniformity and quality of the infrared signal, which must be considered when planning an infrared radiation distribution system. These are discussed in the next sections.

10.2 Directional sensitivity of the receiver

The sensitivity of a receiver is at its best when it is aimed directly towards a radiator. The axis of maximum sensitivity is tilted upwards at an angle of 45 degrees (see the next figure). Rotating the receiver will decrease the sensitivity. For rotations of less than +/- 45 degrees this effect is not large, but for larger rotations the sensitivity will decrease rapidly.

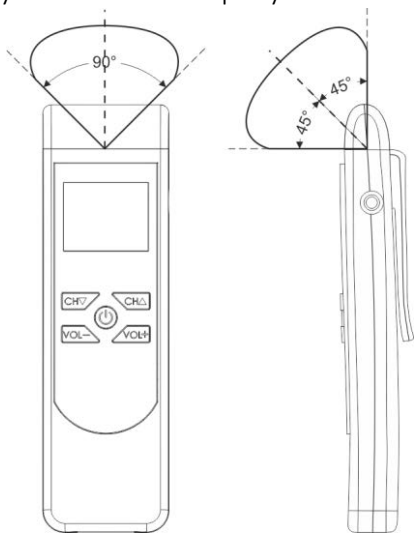

Directional characteristics of the receivers

10.3 The footprint of the radiator

The cross section of the 3-deimensional radiation pattern with the floor of the conference venue is known as the footprint (the white area in the following three figures). This is the floor area in which the direct signal is strong enough to ensure proper reception, when the receiver is directed towards the radiator. As shown, the size and position of the footprint depends on the mounting height and angle of the radiator.

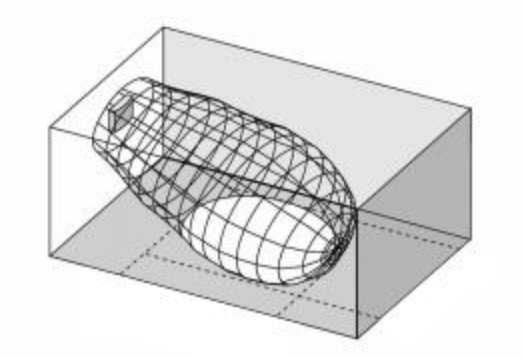

Radiator mounted at 15° to the ceiling

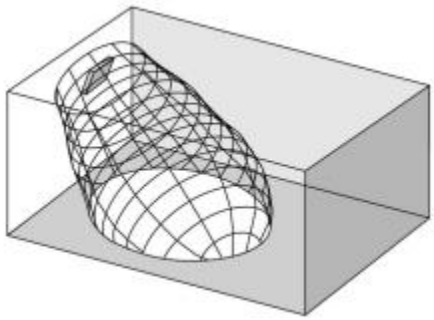

Radiator mounted at 45° to the ceiling

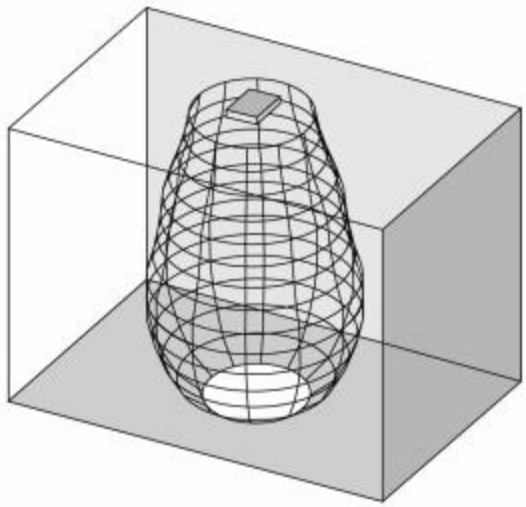

Radiator mounted at 90° to the ceiling

10.4 Position of the radiator

Since infrared radiation can reach a receiver directly and/or via diffused reflections, it is important to take this into account when considering the positioning of the radiators. Though it is best if receivers pick up direct path infrared radiation, reflections improve the signal reception and should therefore not be minimized. Radiators should be positioned high enough not to be blocked by people in the hall (see the next two figures).



Infrared signal is blocked by a person in front of the participant

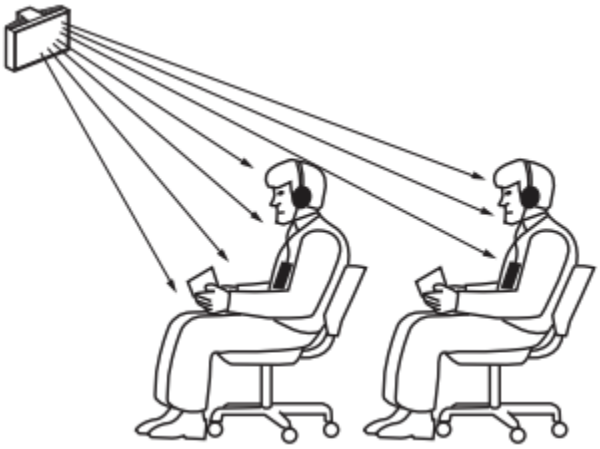

Infrared signal is not blocked by a person in front of the participant

The figures below illustrate how infrared radiation can be directed to conference participants. In left figure, the participant is situated clear from obstacles and walls, so a combination of direct and diffused radiation can be received. Right figure shows the signal being reflected from a number of surfaces to the participant.

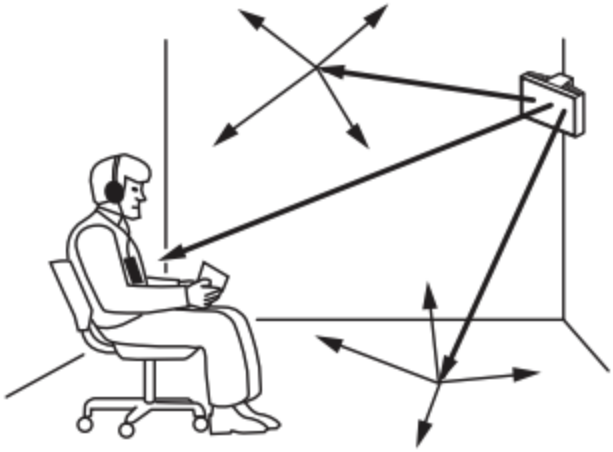

Combination of direct and reflected radiation

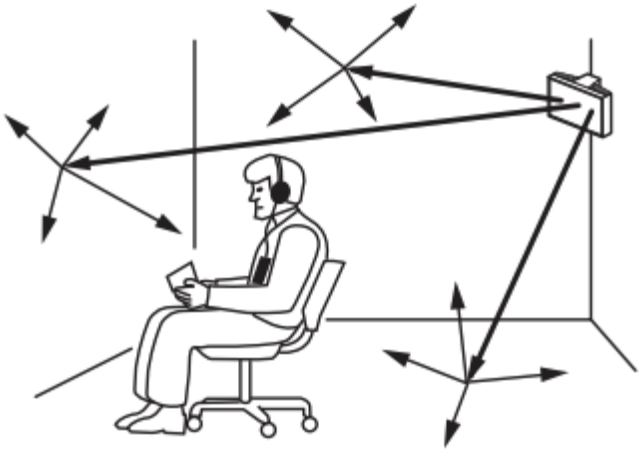

Combination of several reflected signals

For concentrically arranged conference rooms, centrally placed, angled radiators located high up can cover the area very efficiently. In rooms with few or no reflecting surfaces, such as a darkened film-projection room, the audience should be covered by direct path infrared radiation from radiators positioned in front. When the direction of the receiver changes, e.g. with varying seat arrangements, mount the radiators in the corners of the room (see the next figure)

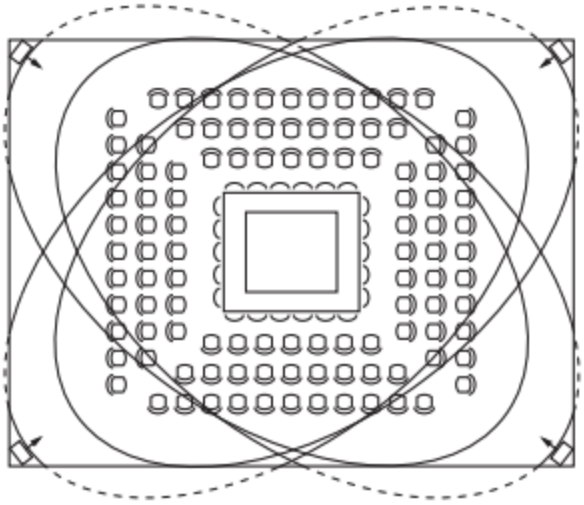

Radiator position for covering seats in a square arrangement

If the audience is always directed towards the radiators, you do not need radiators at the back (see the next figure)

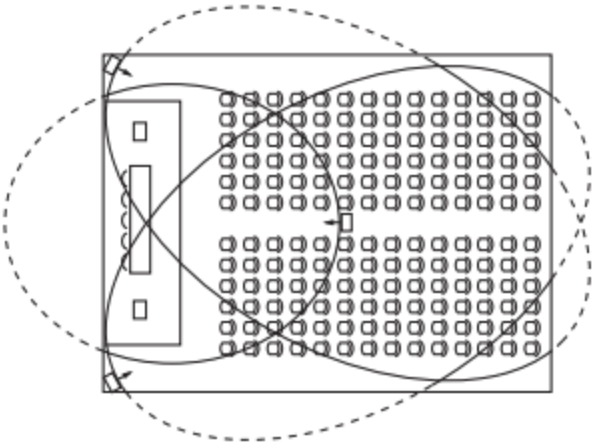

Radiator positioning in a conference hall with auditorium seating and podium

If the path of the infrared signals is partially blocked, e.g. under balconies, you should cover the 'shaded' area with an additional radiator (see the next figure)

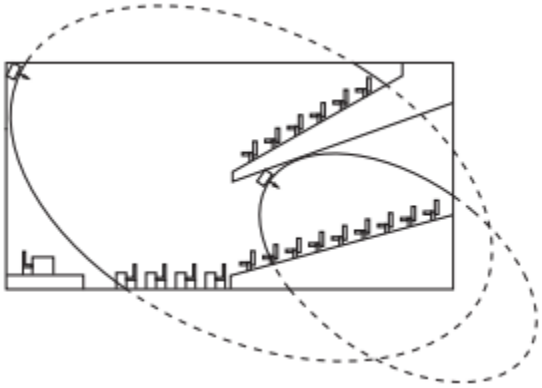

Radiator for covering seats beneath a balcony

10.5 System configuration

Description	Model	Max Qty	NOTE
IR Transmitter	TSID-xx	1	
IR Radiator	TSID-VI	<30	Depend on room layout
Interpreter Console	TSID-CI	<11	
IR Receiver	TSID-IDR	-	
Charging Unit	TSID-BC	-	
Receiver's Earphone	TSID-IDR-H1	-	
Radiator's Tripod	TSID-STAND	-	
Interpreter Headset	TSID-CI-H	-	

10.6 Transmitter installation and connection

Transmitter installation:

a. Put on the table or install in 19 inch frame
b. Please keep away from high-power and strong radiation equipments, or it may influence the equipment performance.
c. Use it in a well-ventilated area

BNC connector installation method

Because the interconnection coaxial cable (50Ω) of IR radiator is used for transmit IR signal, please make sure the circuit not shorted between IR signals and shielding net when install the IR radiator.

a. Please stripping the coaxial cable (50Ω) outer, shield net and insulating layer with above sketch map

b. Insert the wire and connect to the center pin, soldering it

c. Insert the shield net and insulating layer to screw nut connector.

d. Connect ferrule to the screw nut connector's anti-shedding position.

e. Fasten it with pliers.

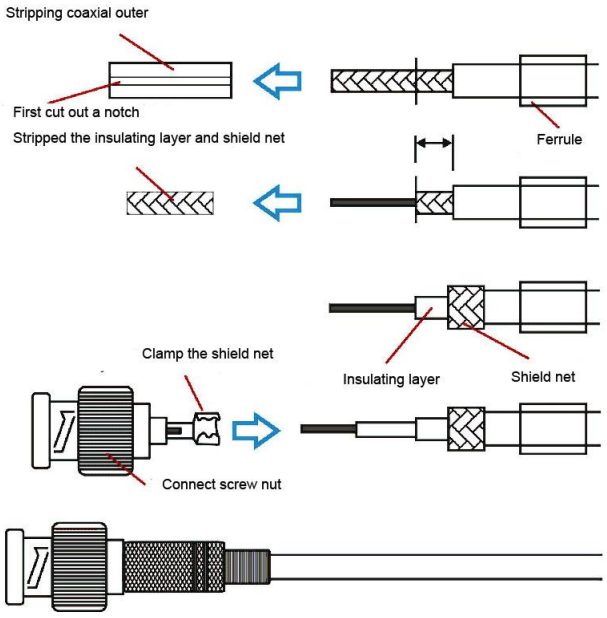

Connect radiators

The TSID-xx transmitter has two BNC HF output connectors labeled 1 and 2 on the rear panel. All outputs are functionally identical. They can each drive up to 30 radiators in a loop-through configuration. The radiators are connected with 50 ohm coaxial shielded cable.

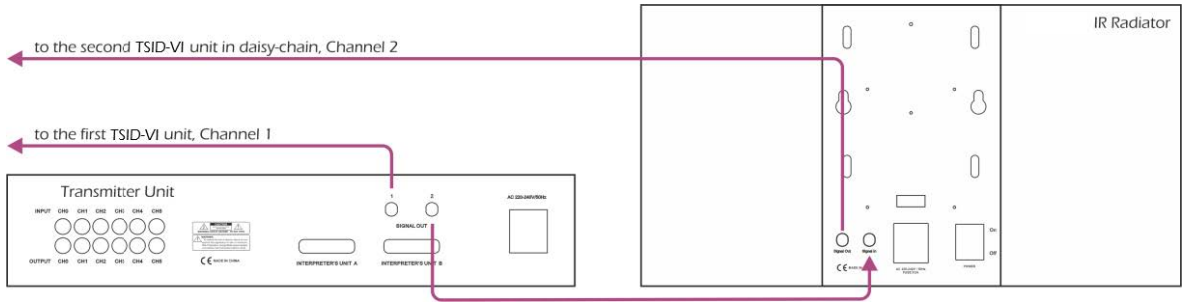

Connect interpreter console

There are two DB25 connectors (IN & OUT) for connecting the interpreter console to the transmitter and loop-through connection to other interpreter consoles, the first one is from transmitter DB25 connector labeled interpreter unit to the interpreter console DB25 connector labeled IN.
The standard interpreter cable length from transmitter to the first interpreter console is 10 meters, and cable length for each interpreter console is 3 meters.

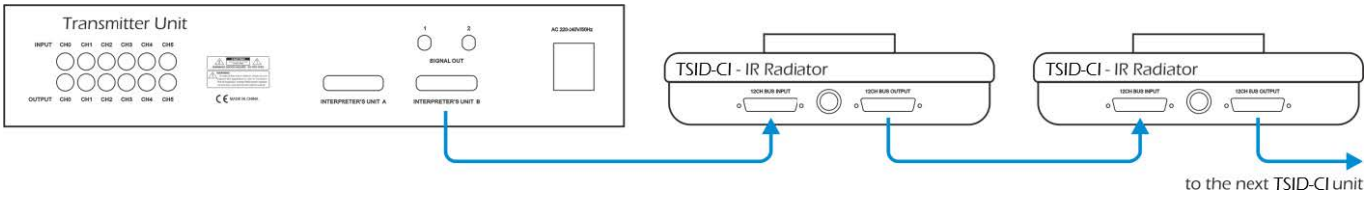

Connect other external audio sources

The transmitter may have up to 12 audio inputs/outputs (depending on the model type) to interact with external asymmetrical audio sources, such as congress system, music distribution. The audio signals are connected to the audio input RCA connectors.

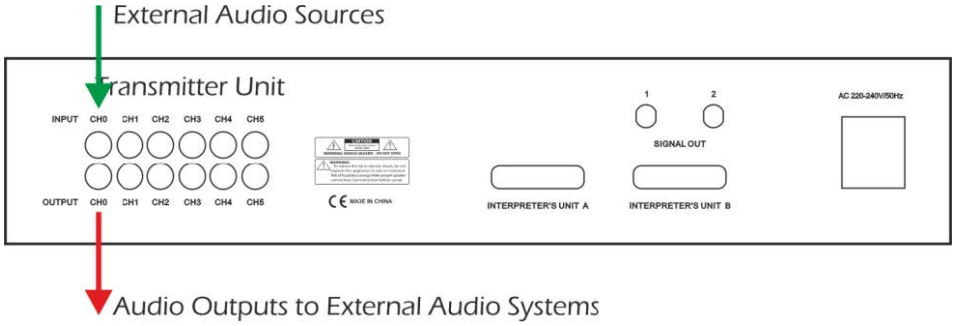

10.7 Installation of radiator

Installation of radiator with bracket

For wall mounting, an extra wall bracket is required. This bracket is attached to the wall by means of 2 bolts.

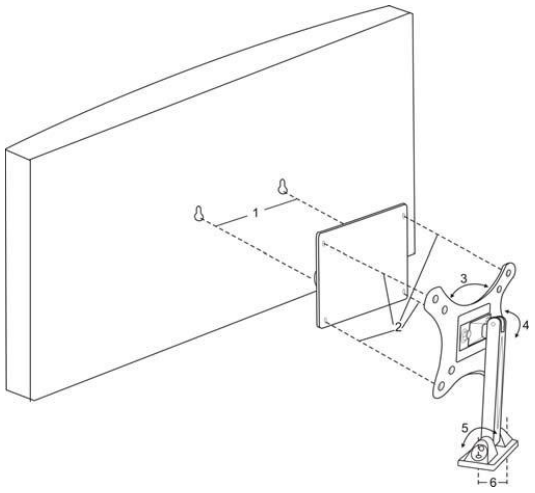

a. Fix the bracket on the wall (Figure 6)

b. Fix the bracket with shim (Figure 2)

c. Fix the shim to radiator (Figure 1)

Way to debug angle:

a. Debug with figure 3: 120°
b. Debug with figure 4: 360°
c. Debug with figure 5: 120°

After mounting and debug the IR radiator, be certain that they are securely fastened.

NOTE:

a. Infrared operating distance varies depending on the color of the ceiling and walls.
b. Noise may be generated by interference regardless of the operating distance between the IR receiver and radiator; in this case, move radiator away from infrared-emitting objects.
c. Block direct sunlight from the unit using curtains or blinds.
d. Install the radiator more than 50cm from fluorescent lamps.
e. In addition, if the IR radiator units are installed near the infrared-emitting sources list below, the system may malfunction or noise may be generated. When installing the IR radiators, take care to avoid placing them near the following infrared-emitting and noise sources:
    - Lighting equipment
    - Projector (liquid crystal, DLP), OHP, incandescent bulbs
    - Mercury lamp, halogen lamps, and inverter fluorescent lamps
    - Plasma displays
    - Infrared devices such as the remote control, infrared microphones and infrared LAN
    - Dimmer controls
    - Digital equipment like the digital power amplifier and cable wiring to this (such as speaker output wiring of the digital power amplifier).

10.8 Installation of interpreter console

Mounting and dismounting the microphone

a. Mounting microphone: Insert the microphone into the microphone mounting socket in a straight line, and then rotate the microphone clockwise to fasten it securely.
b. Dismounting microphone: Rotate the microphone counterclockwise, and then pull the microphone upward to dismounting.

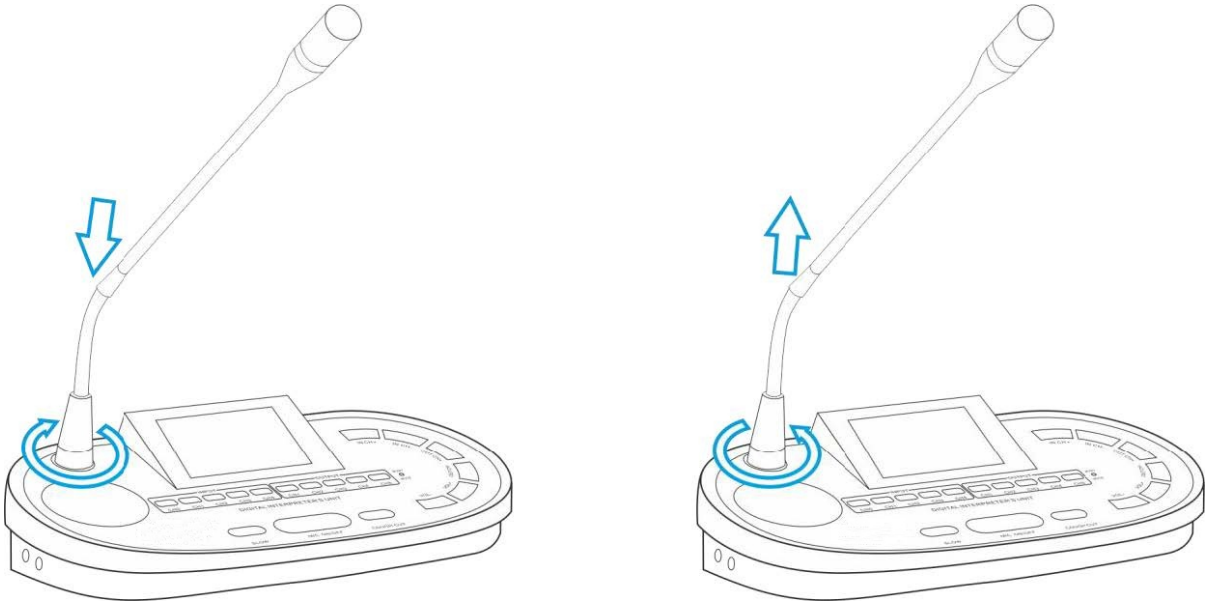

Connect headset to interpreter console

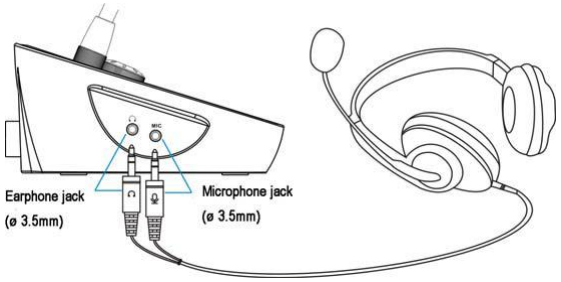

a. Earphone jack (ø 3.5mm): Insert 3.5mm earphone plug to this jack, when this plug connect, interpreter console's microphone will be in mute status automatically.
b. Microphone jack (ø 3.5mm): Insert 3.5mm microphone plug to this jack, when this plug connect, interpreter console's inner speaker will be in mute status automatically.

10.9 Installation of infrared receiver

Battery install

a. Please unlock the cover with dedicated key
b. Remove the battery cover
c. Put 3 AAA 1.2V NI-MH batteries into the case, but please make sure the battery polar is correct
   Note: Please don't make the battery polar wrong, it would be damaged electronic component inside the receiver
d. Fix the cover and with dedicated lock/unlock key

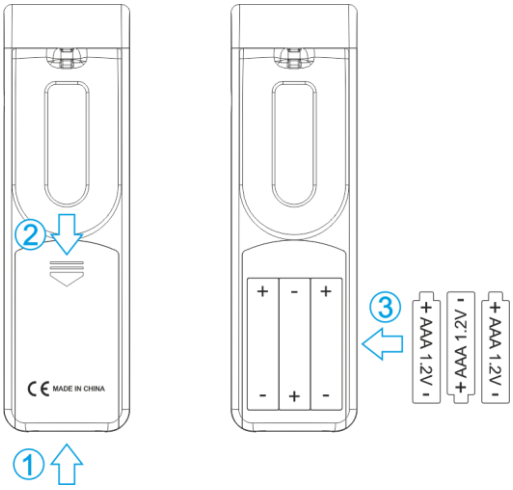

Connect earphone to receiver

Earphone jack (ø 3.5mm): Insert 3.5mm earphone plug to this jack directly.



10.10 System setting and operation

On/Off the transmitter

Turn on the transmitter: Please connect the power cable and turn on the transmitter with power switch, transmitter power LED will lighting.
Turn off the transmitter: Please turn off the transmitter with power switch, transmitter power LED will off.

Interpreter Console

Please connect interpreter consoles to transmitter and turn on the power before setting.

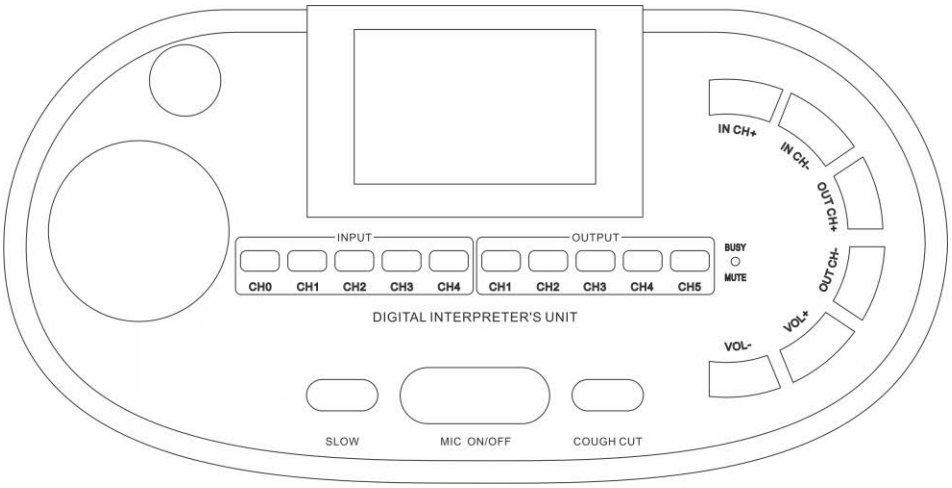

On/Off the interpreter

Turn on the transmitter: There are two DB25 connectors for connecting the interpreter console to the transmitter and loop-through connection to other interpreter consoles, turn on the transmitter power, the interpreter LCD is lighting.
Turn off the interpreter: Please turn off the transmitter with power switch; the interpreter console will be off.

Monitor channel setting

Input channel (Interpreter monitor channel, display CH IN) is from 00 to 11. There are two options for monitor type: Interpreter inner speaker and earphone, Monitor volume can be adjusted by volume button on the interpreter.
Set: To select monitor channel, please press input fast key (CH0-CH4) button “CH IN +” or “CH IN-“, and adjusted the volume by volume knob.

Output channel setting

Output channel (Interpreter translate channel, display CH Out) is from 01 to 12. There are two options for output type: Interpreter microphone and external microphone, “Mic ON/OFF” button control the on/off status no matter it’s the interpreter microphone or external microphone.

Set Channel language

Operator can set the language of each channel: Hold and press input CH0+CH2, LCD will display "CH & LAN set", then press input CH0 or CH1 to select the channel, then press input CH2 or CH3 to select the language of this channel, after setting, press input CH 4 to save and exit. Interpreter support following language display:

a. N/M: not display any language
b. CN-Chinese
c. UK-Ukrainian
d. TR-Turkish
e. TH-Thai
f. SV-Swedish
g. SR-Serbian
h. RU-Russian
i. RO-Romanian
j. PT-Portuguese
k. PL-Polish
l. NO-Norwegian
m. NL-Dutch
n. KO-Korean
o. JA-Japanese
p. IT-Italian
q. HU-Hungarian
r. HR-Croatian
s. FR-French
t. FI-Finnish
u. ES-Spanish
v. EN-English
w. EL-Greek
x. DE-German
y. DA-Denish
z. AR-Arabic

After setting the language, LCD will display the out/input language of each channel.

LCD contrast setting

Hold and press INPUT (CH0+CH1), LCD will display "contrast setting" , press input CH0 or CH1 to decrease or increase LCD contrast, after setting, press input CH 4 to save and exit.

On/Off the interpreter

Turn on the transmitter: There are two DB25 connectors for connecting the interpreter console to the transmitter and loop-through connection to other interpreter consoles, turn on the transmitter power, the interpreter LCD is lighting.

Turn off the interpreter: Please turn off the transmitter with power switch; the interpreter console will be off.

Monitor (Input channel)

Input channel (Interpreter monitor channel, display CH IN) is from 00 to 11. Channel 00 is for floor language, channel 01 to 11 is for monitor other interpreter's output audio. There are two options for monitor type: Interpreter inner speaker and earphone, the console's inner speaker will be in mute status automatically when earphone connected. Monitor volume can be adjusted by volume button on the interpreter.

Interpreter microphone on/off

Turn on the microphone by press the button (MIC ON/OFF), the red indicator is on, interpreter can make a speech. Press the button again, the red indicator is off, interpreter microphone is off. There are two options for output type: Interpreter microphone and external microphone.

Mute function

This button is used for prevention on interpreter's cough. When interpreter press and hold this button, microphone will be off, and microphone will be on again after release this button.

Slow function

When the delegate is speaking too fast, press this button (microphone of the interpreter unit must be active) to remind him/her to slow down).

Infrared receiver

On/Off the receiver

Turn on the receiver: Put three AAA 1.2V NI-MH batteries into the receiver, but please make sure the batteries are full charged and the polar is correct. Pressing the On/Off button switches the receiver on, LCD will display channel, and an antenna symbol is visible when the receiver picks up an infrared signal of adequate quality. Pressing the On/Off button switches the receiver off.

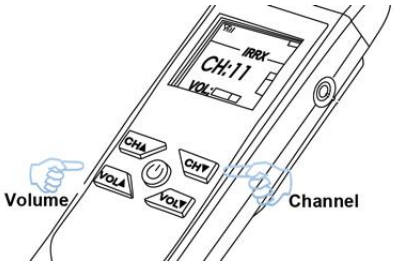

Channel/volume debug

Select channel: An up/down switch to select an audio channel or volume. The channel number (0-11 channels) and volume level is shown on the LCD display.

Battery capacity warning

A battery symbol is visible on the LCD, and the symbol will flashing when the batteries are almost empty, please change or change the battery.

Charging unit

The charging units can recharge up to 24 receivers at one. The charging unit contains the power supply with automatic voltage selection. The charging electronics and a charging indicator LED are integrated in each receiver. The charging circuitry checks if a battery pack is present and controls the charging process.

Ensure that the charging unit is connected to the power and that it is switched on. Place the receivers firmly in the charging compartments. The charging indicator should illuminate. The indicator shows the charging status of each receiver: Red LED flashing – charging in progress, Green LED –Full Charged.

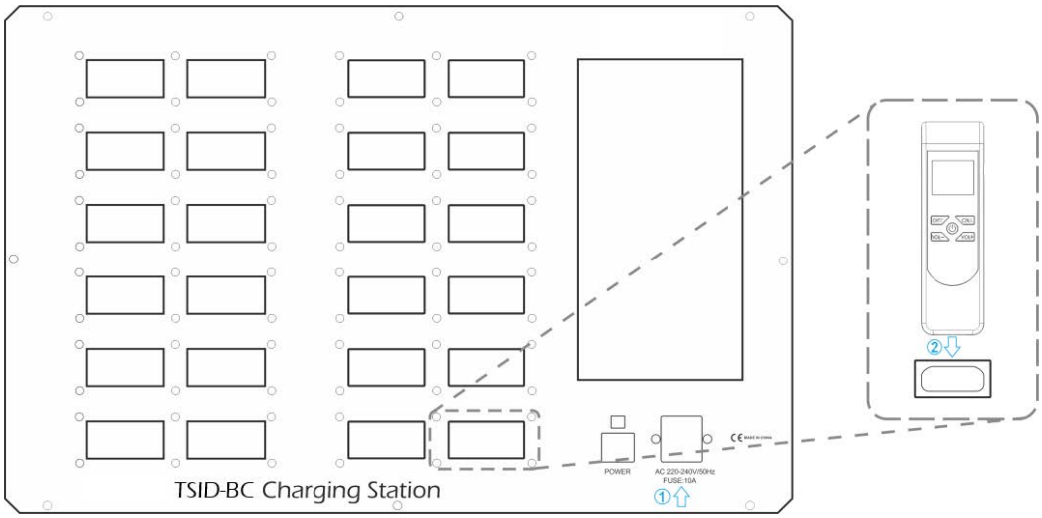

NOTE:

- It is preferred to switch on the charging unit before inserting the receivers. Receivers can be inserted or removed without damage while the charging unit is switched on.
- Charge the batteries to full capacity before using them for the first time.
- The charger always applies fast charge during the first 10 minutes after inserting a receiver. Inserting the receiver multiple times with fully charged batteries should therefore be avoided, as this will damage the batteries.
- Continuously charging the racier will not damage the receiver or batteries. Receivers can therefore safely be left in their charging positions when they are not used.

11. Troubleshooting

In this section a simple fault-finding guide is given. This is intended to be used to remedy the consequences of incorrect installation. If more series faults or problem arise the installer should contact a qualified technician.

Problem	Actions
Transmitter power LED does not light up:	• Check that the power supply to the transmitter is connected and that the transmitter is switched on
No IR signals:	• Ensure that connections to all radiators have been made correctly and that each radiator's power supply is connected and switched on • Examine the Radiator LEDs
Infrared receiver fails to function properly:	• If disposable batteries are used, check whether the batteries have sufficient capacity and whether they are inserted with the correct polarity • If batteries are used, ensure that the batteries are fully charged • Ensure that the headphone is connected properly • Ensure that the receiver picks up sufficient IR signal and check whether the antenna symbol becomes visible • Ensure that the volume control is turned up • Replace the batteries and check whether the problem is resolved
Receiver discharges very quickly:	

NOTE:

Please prevent the equipment dripping by water, do not put the liquid articles such as vase on the equipment.

The power switch of the equipments is monopole; please pullout the plug if the unit will not be used for a long time. The switch has already been turn on when the power indicator lamp is on, and the switch has already been turn off when the power indicator lamp is off.

This machine has no maintain part, for preventing electric shock from being dangerous, do not turn on the machine cover without permission. If need to maintain, please contact sale agent. The appearance of the products is subject to material object; we remain the right to modify any issue without notice in advance.

12. Best Practice

ADERTECH's engineers design products at the highest quality standards. To get the best results and maximum performance from our products, please read this manual carefully. We recommend using high quality connectors, cables, and adapters only. Consider the points below when you choose accessories and position equipment.

13. Safety Instructions

WARNING: To reduce the risk of fire or electric shock, do not expose this device to rain or moisture. Do not use this device near water. Clean only with a dry cloth.

Protect the power cord from being walked on or pinched particularly at plugs, convenience receptacles, and the point where they exit from the device. This unit must be connected to an earthed mains socket outlet with the supplied cable. The AC wall outlet should be installed near to the unit and be easily accessible.

If using cables or extenders which run a long distance, the protective earth circuit of the socket should be verified by a skilled person to ensure equipotential earth bonding. Do not use unit on objects or installations where power lines have grounding and/or different phase issues.

Unplug units during lightning storms or when unused for long periods of time.

Do not install unit near any heat sources such as radiators, heat registers, stoves, or devices (including amplifiers) that produce heat. Do not block any ventilation openings. This unit uses active cooling with fans. Do not install unit in dusty and/or dirty places. Use professional equipment racks with air condition and filters.

14. Warranty Information

ADERTECH warrants all units to be free from defects in workmanship and materials, under normal use and service, for a period of three (3) years from the date of purchasing from authorized reseller.
If a product does not work as it warranted during this period, ADERTECH will repair or replace the defective product or its part. Replacement products may be new or reconditioned.

Warranty ends if the product has been damaged due to abuse, misuse, neglect, accident, unusual physical or electrical stress, unauthorized modifications, tampering, alterations, or servicing other than by ADERTECH or its authorized centers, causes other than from ordinary use or failure to properly use the Product in the application for which said Product is intended

All trademarks are the property of their respective owners. ADERTECH assumes no responsibility for any errors that may appear in this publication. Product, pricing and feature information contained herein is subject to change without notice.

© 2024 ADERTECH Co Ltd. ADERTECH logo and its associated visual identity are trademarks or registered trademarks of ADERTECH and/or subsidiaries.