ADERTECH

H3BT-U4H-150CA



HDMI over HDBaseT 150 meters Extender
User Manual

Thank you for purchasing this product

We have done everything possible to ensure that our equipment pleases our consumers. When solving any problems in the operation and connection ADERTECH equipment, it is best to contact authorized companies and specialists who work with our equipment. Our equipment is intended for professional use, so you have professional skills in using such equipment. ADERTECH is a manufacturer of a wide range of multimedia solutions.

Caution

The product requires the use of UTP connectors. Please connect in direct interconnection method and do not cross connect.

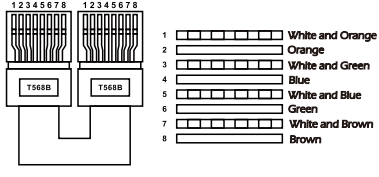

Direct Interconnection Method

Table of Contents

1. Introduction.....1
2. Features.....1
3. Package Contents.....2
4. Specifications.....2
5. Operation Controls and Functions.....4
5.1 Transmitter Panel.....4
5.2 Receiver Panel.....6
6. IR Pin Definition.....7
7. API Commands.....8
8. Application Example.....11

1. Introduction

This 18Gbps HDBaseT 3.0 Extender can extend uncompressed HDMI/USB-C signals, bi-directional IR, RS-232, and USB 2.0 signals up to 328ft/100m via a single CAT6A/7 cable. Video resolution is up to 4K2K@60Hz YUV 4:4:4. The transmitter features with 1x HDMI input, 1x USB-C input (60W charging), 1x USB Host and 3x USB Device ports. It can switch between HDBT Standard Mode (as factory default) and HDBT Long Reach Mode. The receiver features with 1x HDMI output, 2x USB Device ports. Both transmitter and receiver support 3.5mm analog audio de-embedding, EDID management, bi-directional IR and RS-232 signal pass-through. This product supports bi-directional 24V POC function.
The Extender offers the most convenient solution for video extension via a single CAT cable with long distance capability, and it is the perfect solution for home/commercial application.

2. Features

- ☆ Compliant with HDCP 2.3, 18Gbps video bandwidth
- ☆ HDBaseT 3.0 VS3000 chipset based design
- ☆ Support video resolution up to 4K2K@60Hz (YUV 4:4:4) as specified in HDMI 2.0b
- ☆ 4K60/4K30/1080P signal transmission distance up to 328ft/100m via a single CAT6A/7 cable (HDBT Standard Mode)
- ☆ 1080P 8bit signal transmission distance up to 492ft/150m via a single CAT6A/7 cable (HDBT Long Reach Mode)
- ☆ TX features with 1x HDMI input, 1x USB-C input, 1x HDBT output, 1x USB 2.0 host and 3x USB 2.0 clients
- ☆ RX features with 1x HDMI output, 2x USB 2.0 clients
- ☆ USB-C and HDMI signal inputs support auto or manual switching mode
- ☆ Auto switching supports HDMI 5V or signal detect selection
- ☆ USB-C supports DP-ALT mode for A/V, USB 2.0 data and power charging up to 60 watts
- ☆ TX/RX USB-A client ports VBUS on or off depends on USB host is connected or not
- ☆ HDR, HDR10, HDR10+, Dolby Vision LLM and HLG pass-through
- ☆ 4K to 1080p downscaling features on HDMI output, no frame rate conversion
- ☆ Both TX and RX support analog audio de-embedding
- ☆ RS-232 signal pass-through and guest-mode control
- ☆ Support bi-directional IR signal pass-through, USB 2.0 signal transmission
- ☆ Advanced EDID management
- ☆ Each USB-A port provides power up to 5V/500mA
- ☆ Support bi-directional 24V POC, with POC switch
- ☆ Compact design for easy and flexible installation

3. Package Contents

- 1 × 18Gbps HDMI/USB-C over HDBaseT 3.0 Extender (Transmitter)
- 1 × 18Gbps HDMI/USB-C over HDBaseT 3.0 Extender (Receiver)
- 1 × IR Blaster Cable (1.5 meters)
- 1 × IR Wideband Receiver Cable (1.5 meters)
- 2 × 3pin-3.81mm Phoenix Connector (male)
- 4 × Mounting Ear
- 8 × Machine Screw (KM3*4)
- 1 × 24V/3.75A Desktop Power Supply
- 1 × User Manual

4. Specifications

Technical	
HDMI Compliance	HDMI 2.0b
HDCP Compliance	HDCP 2.3
USB Compliance	USB 2.0
Video Bandwidth	18Gbps
Video Resolution	Up to 4K@60Hz 4:4:4
Color Space	RGB, YCbCr 4:4:4, YCbCr 4:2:2, YCbCr 4:2:0
Color Depth	8/10/12bit
IR Level	12Vp-p
IR Frequency	Wideband 20K-60KHz
HDR	HDR, HDR10, HDR10+, Dolby Vision, HLG
Audio Formats	HDMI/USB-C/HDBT: LPCM 2/5.1/7.1CH, Dolby Digital/Plus/EX, Dolby True HD, DTS, DTS-EX, DTS-96/24, DTS High Res, DTS-HD Master Audio, DSD 3.5mm Analog Audio: LPCM 2CH
Transmission Distance	HDBT Standard Mode (4K60/4K30/1080P): 328ft/100m (CAT6A/7) HDBT Long Reach Mode (1080P 8bit): 492ft/150m (CAT6A/7)
ESD Protection	Human body model — ±8kV (Air-gap discharge) &±4kV (Contact discharge)

Connection	
Transmitter	Input: 1 x HDMI IN [Type A, 19-pin female] 1 x USB-C IN [USB Type C, 24-pin female] Output: 1 x HDBaseT OUT [RJ45, 8-pin female] 1 x L/R OUT [3.5mm Stereo Mini-jack] Control: 1 x IR IN [3.5mm Stereo Mini-jack] 1 x IR OUT [3.5mm Stereo Mini-jack] 1 x RS-232 [3pin-3.81mm phoenix connector] 1 x SERVICE [Micro USB, 5-pin female] 1 x USB HOST [USB Type B, 4-pin female] 3 x USB Devices [USB Type A, 4-pin female]
Receiver	Input: 1 x HDBaseT IN [RJ45, 8-pin female] Output: 1 x HDMI OUT [Type A, 19-pin female] 1 x L/R OUT [3.5mm Stereo Mini-jack] Control: 1 x IR IN [3.5mm Stereo Mini-jack] 1 x IR OUT [3.5mm Stereo Mini-jack] 1 x RS-232 [3pin-3.81mm phoenix connector] 1 x SERVICE [Micro USB, 5-pin female] 2 x USB Devices [USB Type A, 4-pin female]
Mechanical	
Housing	Metal Enclosure
Color	Black
Dimensions	Transmitter: 170mm [W] x 102mm [D] x 22mm [H] Receiver: 144mm [W] x 78mm [D] x 23mm [H]
Weight	Transmitter: 484g, Receiver: 318g
Power Supply	Input: AC 100 - 240V 50/60Hz Output: DC 24V/3.75A (US/EU standard, CE/FCC/UL certified)
Power Consumption (Max)	94.32W (Power supply from TX, 60W USB-C charging, POC to RX) 10.8W (Power supply from TX or RX, without USB-C charging)
Operating Temperature	32 - 104°F / 0 - 40°C
Storage Temperature	-4 - 140°F / -20 - 60°C
Relative Humidity	20 - 90% RH (no condensation)

Resolution / Cable Length	4K60 - Feet / Meters	4K24 - Feet / Meters	1080P60 - Feet / Meters
HDMI IN / OUT	26ft / 8M	39ft / 12M	50ft / 15M
The use of "Premium High Speed HDMI" cable is highly recommended.			

5. Operation Controls and Functions

5.1 Transmitter Panel

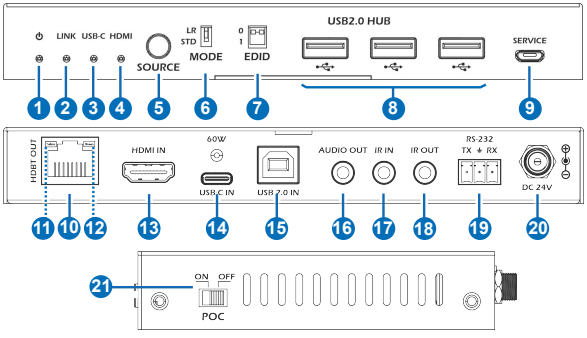

No.	Name	Function Description
1	Power LED	Red LED indicates that the transmitter is powered on.
2	LINK LED (Green)	▪ Light on: Transmitter and receiver are in good connection status. ▪ Light flashing: Transmitter and receiver are in poor connection status. ▪ Light off: Transmitter and receiver are not connected.
3	USB-C LED (Green)	When the USB-C IN port is selected as the video signal input channel, the USB-C LED will be on.
4	HDMI LED (Green)	When the HDMI IN port is selected as the video signal input channel, the HDMI LED will be on.
5	SOURCE button	Press this button to switch HDMI/USB-C signal input.
6	MODE switch	Switch to "STD": The HDBT Standard Mode (as factory default) is enabled, it can extend 4K60/4K30/1080P signal between the transmitter and the receiver up to 100m via a single CAT6A/7 cable. Switch to "LR": The HDBT Long Reach Mode is enabled, it can extend 1080P 8bit signal between the transmitter and the receiver up to 150m via a single CAT6A/7 cable.

NOTE: In the HDBT Long Reach Mode, due to bandwidth limitations, USB cannot transmit USB 2.0 devices, but only can transmit USB HID devices (such as mice and keyboards). When using the USB pass-through function, the serial baud rate may also be limited.

No.	Name	Function Description
7	EDID DIP switch	Used for EDID setting: 00 - Copy display's EDID (as factory default) 01 - 4K30 4:4:4 10 - 1080p60 4:4:4 11 - 1200p60 4:4:4
8	USB Device ports	Three USB extension ports, connected to mouse, keyboard, USB Flash Drive or other USB devices, with a maximum power supply of 500mA.
9	SERVICE	Firmware update and API command control port.
10	HDBaseT OUT	HDBaseT output port, connected to the HDBaseT IN port of receiver with a CAT6A/7 cable. It is used for various signals pass-through.
11	Data Signal Indicator (Yellow)	▪ Light on: There is video signal transmission with HDCP encryption. ▪ Light flashing: There is video signal transmission without HDCP encryption. ▪ Light off: There is no video signal transmission.
12	Link Signal Indicator (Green)	▪ Light on: Transmitter and receiver are in good connection status. ▪ Light flashing: Transmitter and receiver are in poor connection status. ▪ Light off: Transmitter and receiver are not connected.
13	HDMI IN	HDMI signal input port, connected to HDMI source device.
14	USB-C port	USB Type C port with following three functions: (1) USB-C video signal input port, connected to source device. (2) USB-C host port. When the USB-C port is selected as the video signal input channel, the USB-C port can be used as a USB 2.0 signal transmission port simultaneously. (3) USB-C charging port. Only when TX is connected to the 24V/3.75A power supply, the USB-C port can provides 60W charging power for external USB-C devices. When TX is not connected to the power supply and RX is connected to the power supply, the USB-C port can not provide charging function.
15	USB HOST	USB host port, connected to PC. It follows the HDMI IN port. When the HDMI IN port is selected as the input channel, the USB 2.0 signal can only be output through the USB HOST port.
16	L/R OUT	Analog audio output port, used for audio de-embedding output.
17	IR IN	IR signal input port, connected with the IR Receiver cable.
18	IR OUT	IR signal output port, connected with the IR Blaster cable.
19	RS-232	RS-232 serial port, used for RS-232 command pass-through and API command control.

No.	Name	Function Description
20	DC 24V	DC 24V/3.75A power supply input port. **NOTE: extender supports POC function, it means that either transmitter or receiver is powered on by 24V/3.75A power adapter, the other one doesn't need power supply.**
21	POC switch	Use the switch to turn on/off the POC function.

5.2 Receiver Panel

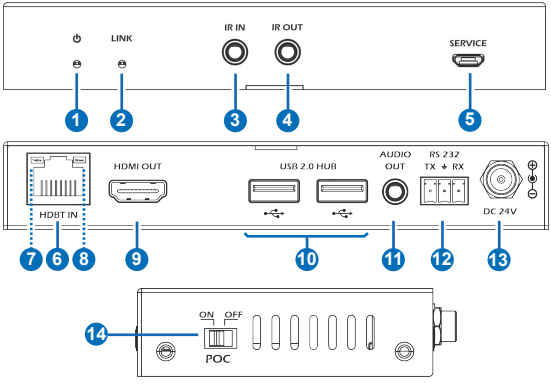

No.	Name	Function Description
1	Power LED	Red LED indicates that the receiver is powered on.
2	LINK LED (Green)	▪ Light on: Transmitter and receiver are in good connection status. ▪ Light flashing: Transmitter and receiver are in poor connection status. ▪ Light off: Transmitter and receiver are not connected.
3	IR IN	IR signal input port, connected with the IR Receiver cable.
4	IR OUT	IR signal output port, connected with the IR Blaster cable.
5	SERVICE	Firmware update and API command control port.
6	HDBaseT IN	HDBaseT input port, connected to the HDBaseT OUT port of transmitter with a CAT6A/7 cable. It is used for various signals pass-through.

No.	Name	Function Description
7	Data Signal Indicator (Yellow)	▪ Light on: There is video signal transmission with HDCP encryption. ▪ Light flashing: There is video signal transmission without HDCP encryption. ▪ Light off: There is no video signal transmission.
8	Link Signal Indicator (Green)	▪ Light on: Transmitter and receiver are in good connection status. ▪ Light flashing: Transmitter and receiver are in poor connection status. ▪ Light off: Transmitter and receiver are not connected.
9	HDMI OUT	HDMI signal output port, connected to HDMI display device, such as TV or monitor.
10	USB Device ports	Two USB extension ports, connected to mouse, keyboard, USB Flash Drive or other USB devices.
11	L/R OUT	Analog audio output port, used for audio de-embedding output.
12	RS-232	RS-232 serial port, used for RS-232 command pass-through and API command control.
13	DC 24V	DC 24V power supply input port. **NOTE: that the extender supports POC function, it means that either transmitter or receiver is powered on by 24V power adapter, the other one doesn't**
14	POC switch	Use the switch to turn on/off the POC function.

6. IR Pin Definition

IR Receiver and Blaster pin's definition as below:

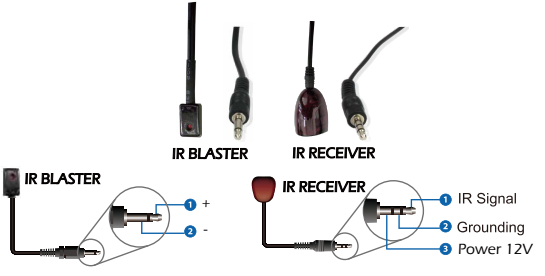

NOTE: When the angle between the IR receiver and the remote control is ± 45 °, the transmission distance is 0-5 meters; when the angle between the IR receiver and the remote control is ± 90 °, the transmission distance is 0-8 meters.

7. API Commands

The product also supports API commands control. Connect the RS-232 port of the product to a PC or control system with a 3-pin phoenix connector cable, or connect the SERVICE port of the product to a PC with a Micro USB cable. Then, open a serial command tool on PC to send ASCII commands to control the product. The ASCII commands list about the product is shown as below.

ASCII Commands				
RS-232 Communication Protocol Baud rate: 115200; Data bit: 8; Stop bit: 1; Parity bit: none. The end mark of command is "<CR><LF>".				
Command Code	**Function Description**	**Example**	**Feedback**	**Default**
help	Get the list of all commands	help	========== Help Info FW Version:TX 1.00.02 RX 1.00.02 1. help 2. r fw version 3. s reboot 4. s reset 5. r status 6. s tx input x 7. r tx input 8. s tx autoswitch x 9. r tx autoswitch 10. s tx autoswitch mode x 11. r tx autoswitch mode 12. s rx downscale x 13. r rx downscale 14. s tx audio mute x 15. r tx audio mute 16. s rx audio mute x 17. r rx audio mute 18. s edid x to y 19. r edid x 20. r edid data x 21. s user edid x <y> 22. r user edid x ==========	
r fw version	Get the firmware version	r fw version	TX 1.0.0 RX 1.0.0	
s reboot	Reboot the device	s reboot	Reboot... System Initializing... Initialization Finished! TX 1.0.0 RX 1.0.0	
s reset	Reset to factory defaults	s reset	Sure to RESET to default settings? Type "Yes" after next prompt to confirm...	

Command Code	Function Description	Example	Feedback	Default
r status	Get system status	r status	Input: USB-C Video: 1920x1080p60 Audio: 48K PCM 2CH HDCP: 1.4 USB Host: Connected HDBT Link: ON HDBT Signal: ON EDID: DIP_00 (Copy display's EDID)	
s tx input x	Set TX input video x = USBC, HDMI, AVMUTE, OFF	s tx input USBC	Set tx input from USBC	USBC
r tx input	Get TX input port	r tx input	USBC	
s tx autoswitch x	Set TX auto-switching on/off x = ON, OFF	s tx autoswitch ON	Set tx autoswitch ON	ON
r tx autoswitch	Get TX auto-switching status	r tx autoswitch	ON	
s tx autoswitch mode x	Set TX auto-switching mode x = 0: 5V detection 1: signal detection	s tx autoswitch mode 1	Set tx autoswitch mode 1: signal detection	1: signal detection
r tx autoswitch mode	Get TX auto-switching mode status	r tx autoswitch mode	TMDS	
s rx downscale x	Set RX downscaling mode, x= AUTO: automatically according to display's capability ON: force 4K to 1080p OFF: bypass video	s rx downscale AUTO	Set rx downscale AUTO	AUTO
r rx downscale	Get RX downscaling mode	r rx downscale	AUTO	
s tx audio mute x	Set TX de-embedding audio mute on/off x = ON, OFF	s tx audio mute ON	Set tx audio mute ON	OFF
r tx audio mute	Get TX de-embedding audio mute status	r tx audio mute	OFF	
s rx audio mute x	Set RX de-embedding audio mute on/off x = ON, OFF	s rx audio mute ON	Set rx audio mute ON	OFF
r rx audio mute	Get RX de-embedding audio mute status	r rx audio mute	OFF	

Command Code	Function Description	Example	Feedback	Default
s edid x to y	Set input ports EDID x = USBC, HDMI, ALL y = 00 - EDID dip switch (default) 01 - 1920x1080@60 8bit Stereo 02 - WUXGA 1920x1200 03 - 1920x1080@60 8bit High Definition Audio 04 - 3840x2160@60Hz 4:2:0 Deep Color Stereo Audio 05 - 3840x2160@60Hz Deep Color Stereo Audio 06 - 3840x2160@30Hz 8bit Stereo Audio 07 - 3840x2160@60Hz Deep Color High Definition Audio 08 - 3840x2160@60Hz Deep Color HDR LPCM 6CH 09 - copy EDID from RX HDMI output 10 - User Defined 1 11 - User Defined 2	s edid USBC to 00	Set edid USBC to 00 - EDID dipswitch (default)	00
r edid x	Get input ports EDID x = USBC, HDMI	r edid USBC	00 - EDID dipswitch (default)	
r edid data x	Get input ports EDID data x = USBC, HDMI	r edid data USBC	USBC EDID <00 FF FF FF....>	
s user edid x <y>	Set user defined EDID x = 1 (User Defined 1) x = 2 (User Defined 2) y = 00 FF FF FF ..... (y is 256 bytes EDID data)	s user edid 1 <00 FF FF FF....>	User edid 1 is loaded	
r user edid x	Get user defined EDID x = 1 (User Defined 1) x = 2 (User Defined 2)	r user edid 1	User edid 1 <00 FF FF FF....>	
s hdbt update	Set Micro USB (UART) to HDBT UART for FW update	s hdbt update	Hdbt update	

NOTE: The API command "s hdbt update" is for internal use only .

8. Application Example

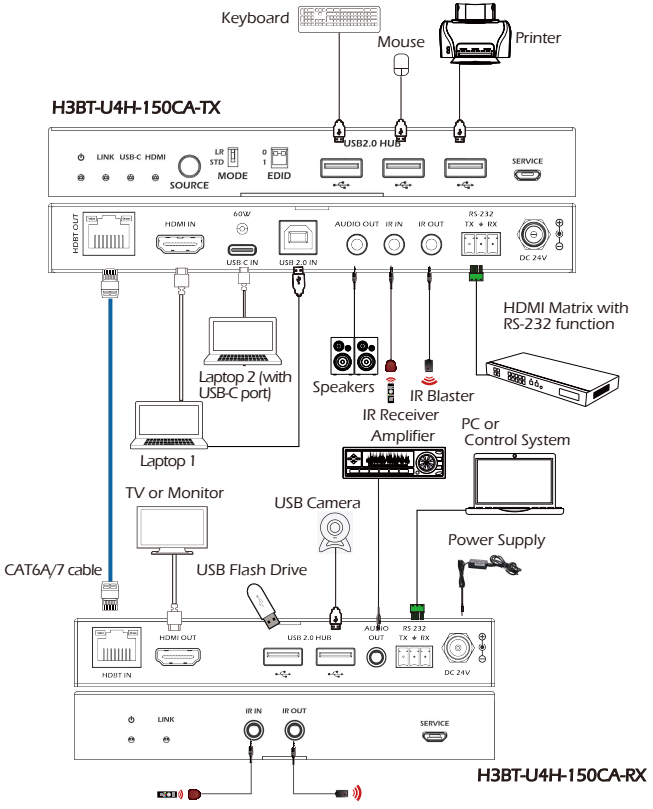

All trademarks are the property of their respective owners. ADERTECH is not responsible for any errors that may appear in this document publication. Product, pricing and feature information contained herein is subject to change without notice.
© 2023 ADERTECH Co Ltd.
The ADERTECH logo and associated visual identity are trademarks or registered trademarks of ADERTECH and/or its affiliates.