ADERTECH

H2BT-U4HWP-100CA

4K60 HDMI/USB-C 2x1
HDBT Wall-plate Extender (86mm×86mm Wall Box)



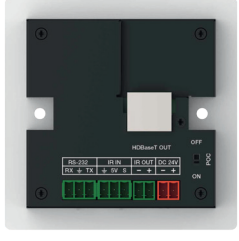

Wall-plate Transmitter



HDBT Receiver

User Manual

VER 1.0

Thank you for choosing ADERTECH products

We have done everything possible to ensure that our equipment pleases our consumers. When solving any problems in the operation and connection of ADERTECH equipment, it is best to contact authorized companies and specialists who work with our equipment. Our equipment is intended for professional use, so you have professional skills in using such equipment. ADERTECH is a manufacturer of a wide range of multimedia solutions.

Surge protection device recommended

This product contains sensitive electrical components that may be damaged by electrical spikes, surges, electric shock, lighting strikes, etc. Use of surge protection systems is highly recommended in order to protect and extend the life of your equipment.

Table of Contents

1. Introduction..... 1
2. Features..... 1
3. Package Contents..... 2
4. Specifications..... 2
5. Operation Controls and Functions..... 3
   5.1. Transmitter Panel..... 3
   5.2. Receiver Panel..... 5
   5.3. Dimensions of Wall Box..... 6
6. Application Example..... 8

1. Introduction

The 4K60 HDMI/USB-C 2x1 HDBT Wall-plate Transmitter supports one HDMI input and one USB-C input within a standard 86mm×86mm wall box. It can transmit HDMI high-definition signal, bidirectional IR control signal, bidirectional RS-232 control signal and USB 2.0 signal over CAT6 to the distance up to 328ft/100m (HBT mode) or 492ft/150m (LRM mode). Video resolution is up to 4K2K@60Hz (4:4:4).

This product converts HDMI signal to standard HDBaseT signal and transmits it through LAN cable. It can easily control signal source device or display device from the remote end through bi-directional IR signal pass-through function. It also supports POC function with POC control switch. The Extender can be widely used in other fields such as video conference system, multimedia signal broadcasting, HDMI signal extension, etc.

2. Features

☆ HDMI 2.0b, HDCP 2.2/1.x and DP 1.2a compliant
☆ HDMI input supports 18Gbps video bandwidth
USB input supports 5.4Gbps video bandwidth
☆ Support video resolution up to 4K2K@60Hz (4:4:4)
☆ Up to 7.1 channels HD audio
☆ Input signal source selection supports button switching
☆ Built-in mode DIP switch for selecting the HBT mode or LRM mode
HBT mode: Audio and video signals can be transmitted up to 328ft/100m for 4K60/4K30/1080P
LRM mode: Audio and video signals can be transmitted up to 492ft/150m for 4K30/1080P
☆ Built-in EDID DIP switch supports intelligent EDID management
☆ Built-in audio DIP switch supports analog audio embedding
☆ Built-in POC switches, when both POC switches of TX and RX are turned on, the Extender supports bidirectional 24V POC function, that is, either TX or RX is powered by 24V1A power supply, the another does not need power supply from the DC jack. (See the Description 1)
☆ Transmit bidirectional Infrared control signal together with the HDMI signal. (See the Description 2)
IR IN is a 5V power supply level
☆ Transmit bidirectional RS-232 control signal together with the HDMI signal. (See the Description 3)
☆ The Receiver supports USB 2.0 signal transmission
☆ Standard 86mm×86mm wall box

3. Package Contents

① 1 x 4K60 HDMI/USB-C 2x1 HDBT Wall-plate Transmitter
② 1 x HDBT Receiver
③ 2 x 2pin-3.81mm Phoenix connector (male)
④ 4 x 3pin-3.81mm Phoenix connector (male)
⑤ 1 x Wideband IR Receiver cable (1.5 meters)
⑥ 1 x IR Blaster cable (1.5 meters)
⑦ 2 x Mounting Ears
⑧ 4 x Machine Screws-M3*4
⑨ 1 x 24V/1A Locking Power Supply
⑩ 1 x User Manual

4. Specifications

Technical	
HDMI Compliance	HDMI 2.0b
HDCP Compliance	HDCP 2.2
Video Bandwidth	HDMI: 18Gbps; USB-C： 5.4Gbps
HDMI Video Resolution	Up to 4K2K@60Hz 4:4:4
Color Space	RGB 4:4:4, YCbCr 4:4:4, YCbCr 4:2:2, YCbCr 4:2:0
Color Depth	8/10/12bit
HDMI Audio Formats	LPCM 7.1CH, Dolby True HD and DTS-HD Master (Full format)
Analog Audio Embedding	48KHz
Transmission Distance	LRM mode: 492ft/150m (4K30/1080P) STD-HBT mode: 328ft/100m (4K60/4K30/1080P)
ESD Protection	Human body model—±8kV (Air-gap discharge) &±4kV (Contact discharge)
Connections	
Transmitter	Input: 1 x HDMI IN [Type A, 19-pin female] 1 x USB-C IN [USB Type C] 1 x AUDIO IN [3.5mm Stereo Mini-jack] Output: 1 x HDBaseT OUT [RJ45] Control: 1 x TO PC [USB Type B] 1 x RS-232 [3pin-3.81mm Phoenix connector] 1 x IR IN [3pin-3.81mm Phoenix connector] 1 x IR OUT [2pin-3.81mm Phoenix connector]
Receiver	Input: 1 x HDBT IN [RJ45] Output: 1 x HDMI OUT [Type A, 19-pin female] 1 x AUDIO OUT [3pin-3.81mm Phoenix connector] Control: 2 x USB 2.0 [USB Type A] 1 x RS-232 [3pin-3.81mm Phoenix connector] 1 x IR IN [3pin-3.81mm Phoenix connector] 1 x IR OUT [2pin-3.81mm Phoenix connector] 1 x SERVICE [Micro USB]

Mechanical	
Housing	Metal Enclosure
Color	Front panel: White; Rear case:Black
Dimensions	Transmitter: 86mm [W] x 86mm [D] x 38.5mm [H] Receiver: 157.2mm [W] x 88mm [D] x 20mm [H]
Weight	Transmitter: 234g; Receiver: 377g
Power Supply	24V/1A (supporting bidirectional POC power supply)
Power Consumption	12.48W (Max)
Operating Temperature	32 - 104°F / 0 - 40°C
Storage Temperature	-4 - 140°F / -20 - 60°C
Relative Humidity	20 - 90% RH (no condensation)

5. Operation Controls and Functions

5.1 Transmitter panel

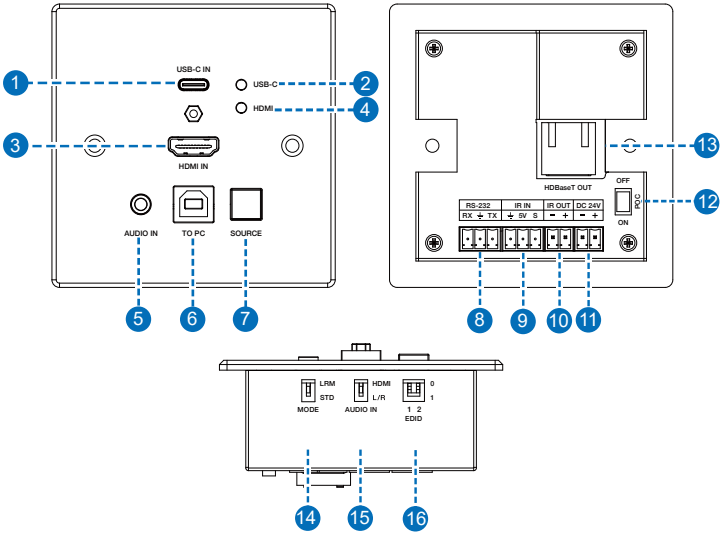

No.	Name	Function Description
1	USB-C IN port	USB-C signal input port, supporting video signal (up to 4K60) and USB2.0 signal, connected to USB-C signal source device.
2	USB-C LED	USB-C signal input indicator. When the USB-C signal is selected as the input source, the green indicator light on.
3	HDMI IN port	HDMI signal input port, connected to HDMI source device, such as Blu-ray or PS4.
4	HDMI LED	HDMI signal input indicator. When the HDMI signal is selected as the input source, the green indicator light on.
5	AUDIO IN port	Analog audio input port for audio embedding.
6	TO PC port	USB-B port, connected to PC. This port can be switched along with the HDMI IN port, that is, when switching to the HDMI signal source, the USB HOST can be selected simultaneously.
7	SOURCE button	Used to switch HDMI/USB-C input signal source.
8	RS-232 port	Connected to PC or control system through 3-pin Phoenix connector for RS-232 serial command pass-through.
9	IR IN port	Connected to IR wideband receiver cable, receiving the remote control signal and then send it to the receiving end.
10	IR OUT port	Connected to IR blaster cable, sending the remote control signal from the receiving end.
11	DC 24V port	DC 24V/1A power input port. *Note that the extender supports POC function, it means that either transmitter or receiver is powered on by 24V/1A power adapter, the other one doesn't need power supply.*
12	POC switch	Use the switch to turn on/off POC function.
13	HDBaseT OUT port	HDBaseT signal output port, connected to the HDBT IN port of Receiver with a CAT6 cable.
14	MODE DIP switch	Used to select the working mode: **LRM-long reach mode:** Extend the signal up to 492ft/150m through a single CAT6 network cable. **STD-HBT mode:** Extend the signal up to 328ft/100m through a single CAT6 network cable.
15	AUDIO IN DIP switch	Used to select the signal source for the audio output of Receiver: **HDMI:** Output the de-embedded audio from the HDMI IN port of Transmitter. **L/R:** Output the analog audio embedded from the AUDIO IN port of Transmitter.

No.	Name	Function Description
16	EDID DIP switch	Used to set the EDID information: 00- Copy RX display's EDID (as factory default) 01- 4K30 4:4:4 10- 1080p60 4:4:4 11- 1200p60 4:4:4

5.2 Receiver panel

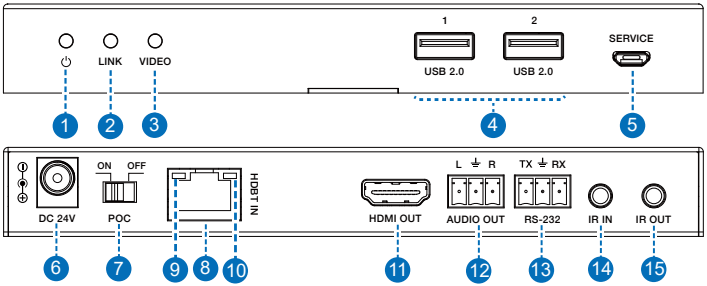

No.	Name	Function Description
1	Power LED	Red LED indicates that the Receiver is powered on.
2	LINK LED (Green)	▪ Light on: Transmitter and Receiver are in good connection status. ▪ Light Flashing: Transmitter and Receiver are in poor connection status. ▪ Light off: Transmitter and Receiver are not connected.
3	VIDEO LED (Green)	**Signal indicator** ▪ Light Flashing: There is valid signal input. ▪ Light off: There is no signal or the signal is invalid.
4	USB 2.0 port	USB Type A port for connecting USB 2.0 devices, such as USB Flash Drive, Mouse and Keyboard.
5	SERVICE port	Software update port. Send command "s switch uart 0!" to switch MCU; send command "s switch uart 1!"to switch VALENS.
6	DC 24V port	DC 24V/1A power input port. *Note that the extender supports POC function, it means that either transmitter or receiver is powered on by 24V/1A power adapter, the other one doesn't need power supply.*

No.	Name	Function Description
7	POC switch	Use the switch to turn on/off POC function.
8	HDBT IN port	HDBaseT signal input port, connected to the HDBaseT OUT port of Transmitter with a CAT6 cable.
9	Link Signal Indicator (Green)	▪ Light on: Transmitter and Receiver are in good connection status. ▪ Light Flashing: Transmitter and Receiver are in poor connection status. ▪ Light off: Transmitter and Receiver are not connected.
10	Data Signal Indicator (Yellow)	▪ Light Flashing: There is data transmission. ▪ Light off: There is no data transmission.
11	HDMI OUT port	HDMI signal output port, connected to HDMI display device such as TV or monitor.
12	AUDIO OUT port	Analog audio output port.
13	RS-232 port	Connected to PC or control system through 3-pin Phoenix connector for RS-232 serial command pass-through.
14	IR IN port	Connected to IR wideband receiver cable, receiving the remote control signal and then send it to the transmitting end.
15	IR OUT port	Connected to IR blaster cable, sending the remote control signal from the transmitting end.

5.3 Dimensions of Wall Box

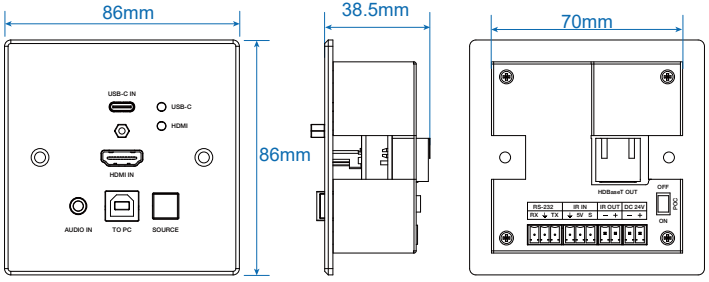

Front panel **Side Panel** **Rear Panel**

※ Description 1

POC (Power over Cable) Application Example

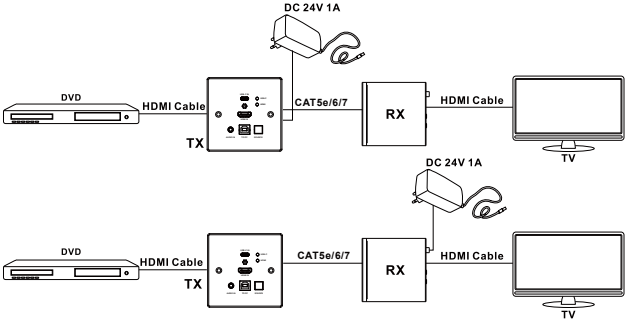

※ Description 2

Bidirectional Infrared control Application Example

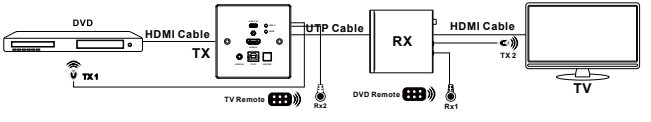

※ Description 3

Bidirectional RS-232 control Application Example

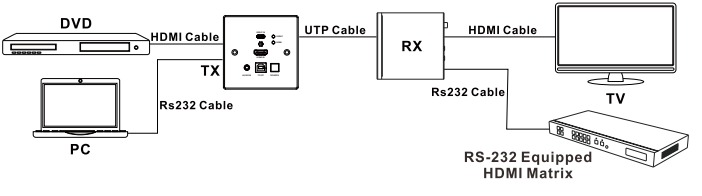

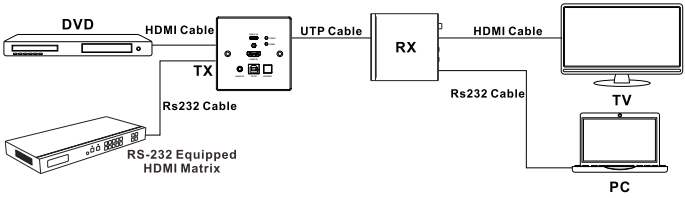

6. Application Example

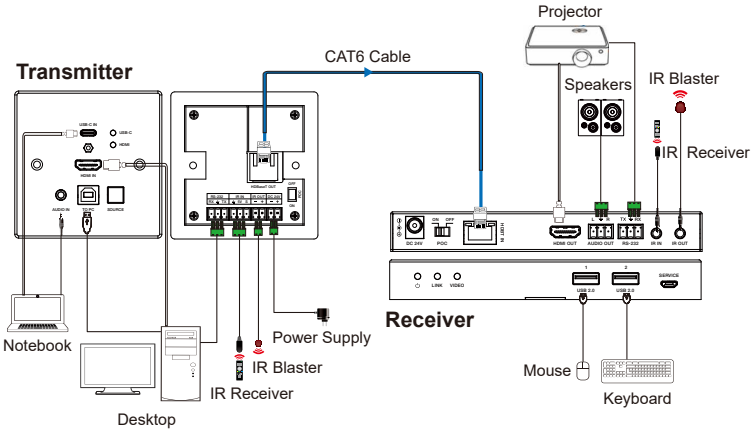

Quality Assurance

We have developed a strict quality assurance process and built a full-fledged testing laboratory. First-class high and low temperature laboratories, reliability and compatibility ensure that every product undergoes rigorous testing from design to delivery and is delivered free of defects.

After-sales service

We have established a complete after-sales warranty service system to respond to customer requirements in real time and quickly solve customer problems.

All trademarks are the property of their respective owners. ADERTECH is not responsible for any errors that may appear in this document publication. Product, pricing and feature information contained herein is subject to change without notice.

© 2023 ADERTECH Co Ltd.
The ADERTECH logo and associated visual identity are trademarks or registered trademarks of ADERTECH and/or its affiliates.