# Digital Array Microphone Quick Start Guide

## 1 Packing List

| Name | Quantity | Name | Quantity |
|---|---|---|---|
| Microphone | 1 | Remote Control (optional) | 1 |
| USB Cable | 1 | Mounting Bracket (optional) | 1 |
| Audio Cable | 1 | Quick Start Guide | 1 |
| Network Cable | 1 | - | - |

## 2 Appearance and Interface

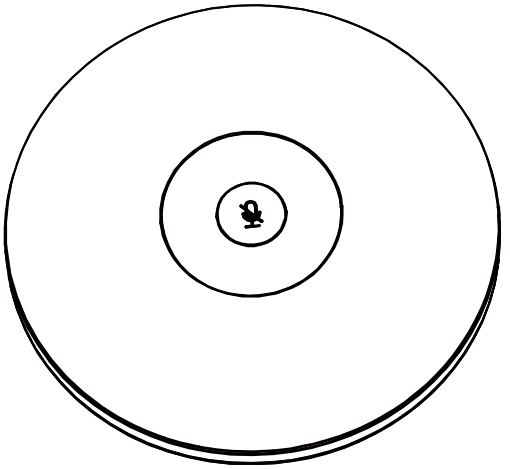

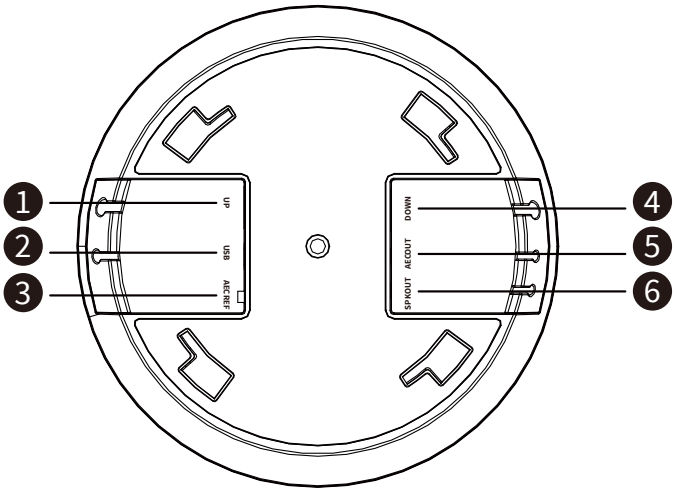


| No. | Interface | Description |
|---|---|---|
| 1 | UP | Up cascade network interface, cascading up devices through PoE network cable. |
| 2 | USB | USB audio interface for connecting to the USB host or powering the microphone. |
| 3 | AECREF | Disable. |
| 4 | DOWN | Down cascade network interface, cascading down devices through PoE network cable. |
| 5 | AECOUT | Audio output interface, sound collected by the local microphone can be output to the terminal or recording host. |
| 6 | SPKOUT | Audio output interface (playing remote audio), the audio signal sent from the remote classroom can be output to the local speaker for playback. |

## 3 Product Features

**Digital Array Microphone, Long Distance Voice Pickup**

High SNR ring microphone array design, clear pickup from long distance. Let the speaker move around more freely in the room and get rid of the constraints.

**Blind Beamforming, Automatic Alignment to Speaker**

Blind beamforming, precise positioning, adaptive sound field environment can achieve voice enhancement and better anti-interference ability.

**Smart Audio Algorithms, Clear Natural Sound**

Built-in powerful audio processing unit, ultra-low signal processing delay; Adaptive fast convergence algorithm, voice intelligent tracking, intelligent noise reduction, echo cancellation, automatic gain, de-reverberation and other advanced technologies, double-talk without suppression, you can easily listen in noisy environments. For ordinary users, there is no need for professional tuning, and it can be used for regular conference applications when it is turned on. For enthusiast users, you can also open the EQ interface and enter the professional tuner mode for personalized high-end tuning.

**PoE Cascade, Even Coverage of Conference Room Pickup**

Flexible setting of master and slave devices, support up to 6 microphone PoE cascade, distributed pickup and interaction, evenly covering medium and large conference room spaces.

**Standard Interface, Plug and Play**

Equipped with standard USB and 3.5mm audio interfaces, the device is plug and play, and can meet the dual-mode application of digital and analog audio.

**Hoisting/Wall/Ceiling Mounting, Simple and Flexible Deployment**

Support hoisting, wall, ceiling mounting, flexible and fast deployment, and reduce operation and maintenance costs.

## 4 Product Specifications

| | |
|---|---|
| **Audio Features** | |
| Microphone Type | Omnidirectional Microphone |
| Array Microphone | Built-in 6 mics to form ring array microphone, 360° omnidirectional pickup |
| Sensitivity | -38 dBFS |
| Signal Noise to Ratio | 65 dB(A) |
| Frequency Response | 50Hz~16kHz |
| Pickup Range | 3m |
| Automatic Echo Cancellation (AEC) | Support |
| Automatic Noise Suppression (ANS) | Support |
| Automatic Gain Control (AGC) | Support |
| **Hardware Interfaces** | |
| Network Interface | 1 x UP: Up cascade network interface |
| | 1 x DOWN: Down cascade network interface |
| USB Interface | 1 x USB: USB audio interface |
| Audio Interface | 1 x AECOUT: 3.5mm audio output interface |
| | 1 x SPKOUT: 3.5mm audio output interface |
| **General Specifications** | |
| Cascade Mode | PoE network interface |
| Power Supply | Single microphone USB/cascade PoE power supply |
| Dimension | Φ170mm x H 40mm |
| Net Weight | About 0.4Kg |

Note Product specifications are subject to change without notice.

# 5 Product Installation

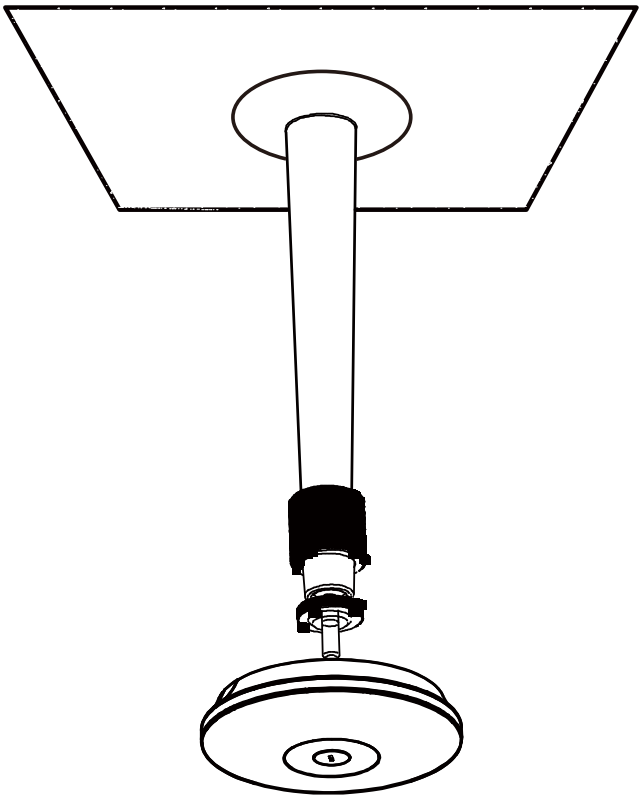

Note The installation diagram is for reference only. The bracket is not standard. Please refer to the actual product for the installation accessories.

# 6 Network Application

## 6.1 Single Mode

### USB Connection




### PoE Connection




### Analog 3.5mm Connection

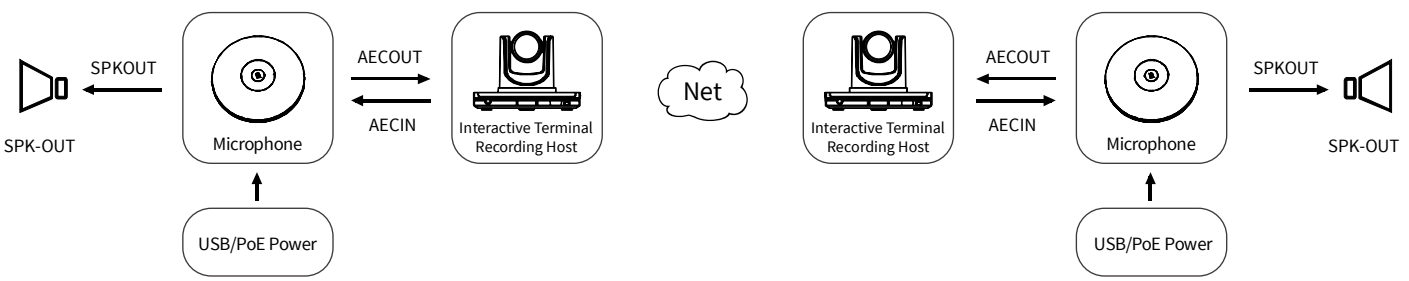

## 6.2 Cascade Mode

PoE Connection

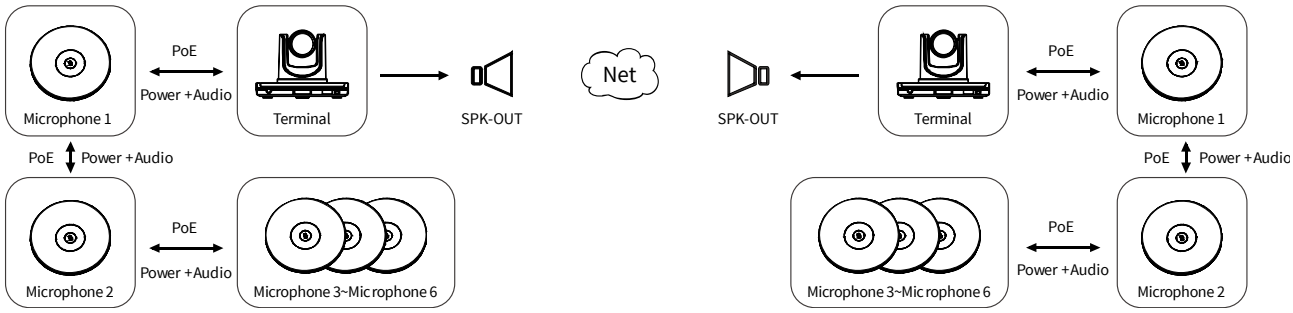


USB Connection

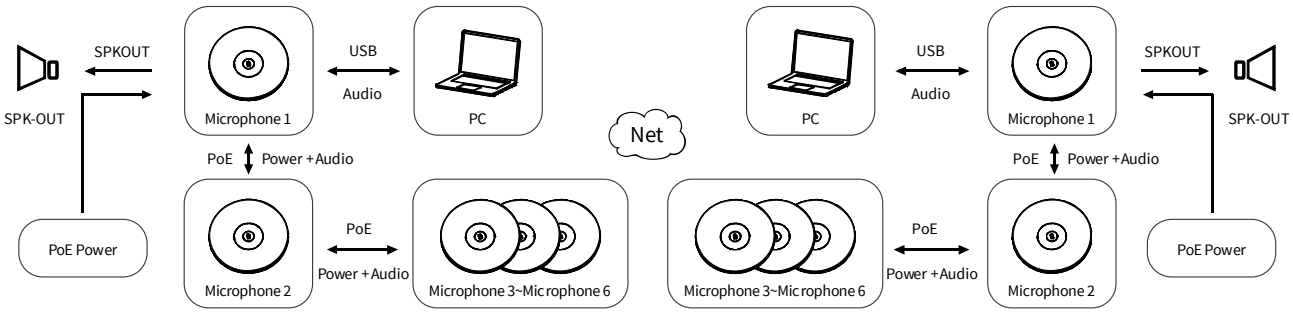


Analog 3.5mm Connection

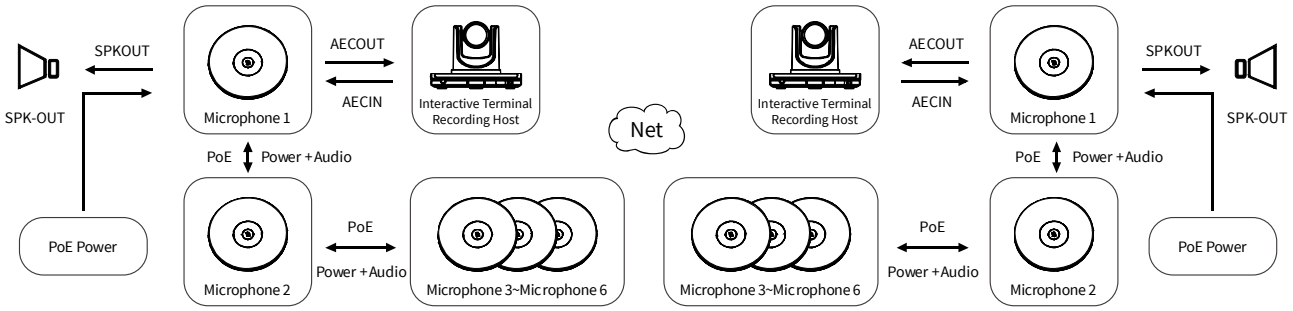


# 7 Application Scenario

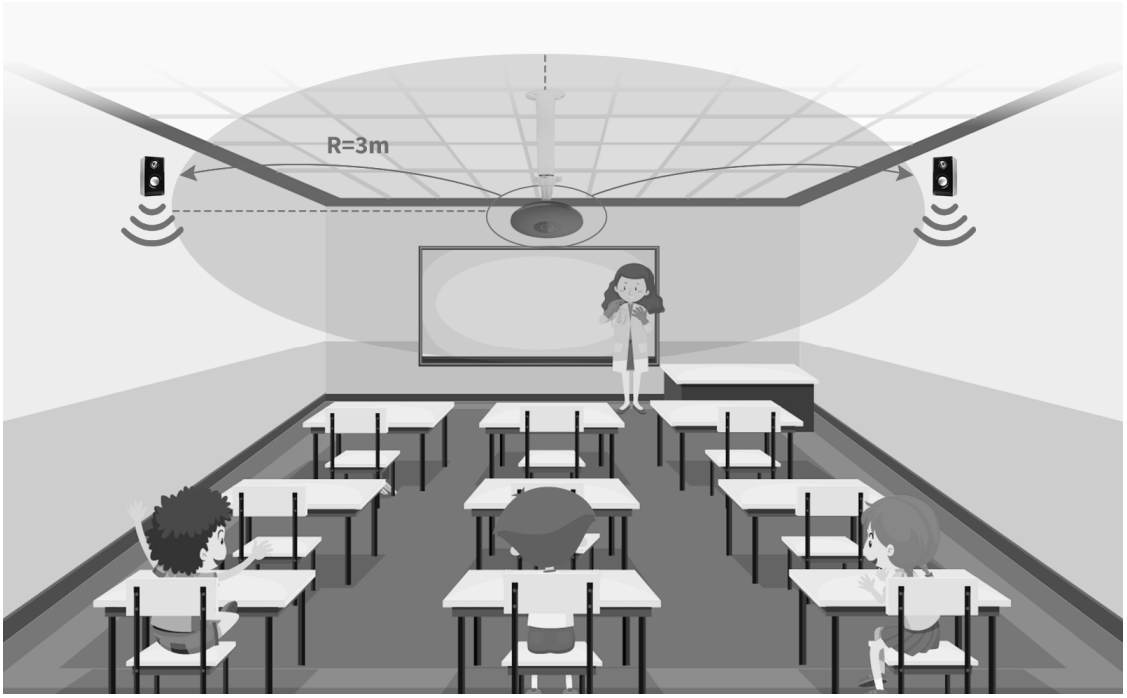


Note The schematic diagram is for reference only. Please refer to the actual application scenario for equipment and installation.

# 8 Scenario Installation (Classroom)

For classroom installation, please refer to the figure below. The USB interface is used as the power supply port of the microphone, and can be connected to the socket or adapter with USB interface. The power supply voltage is DC 5V. The SPKOUT audio output interface is output to active speakers or power amplifiers through a 3.5mm interface audio cable. It is recommended to use low-latency active speakers first, and the speaker experience will be better.

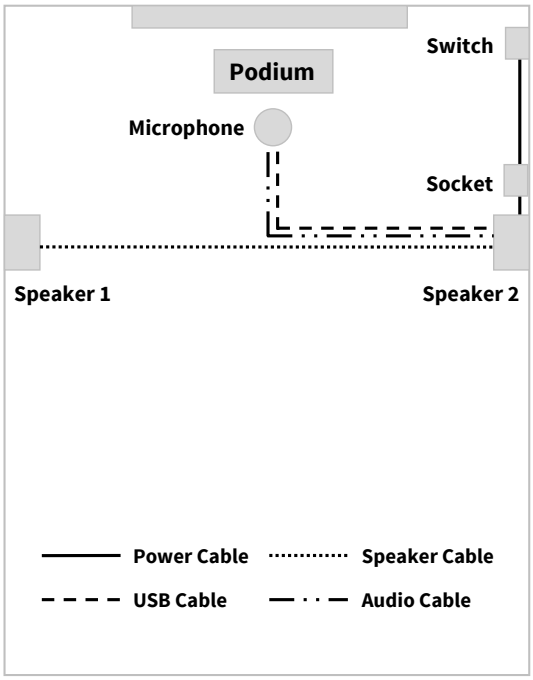


Top View

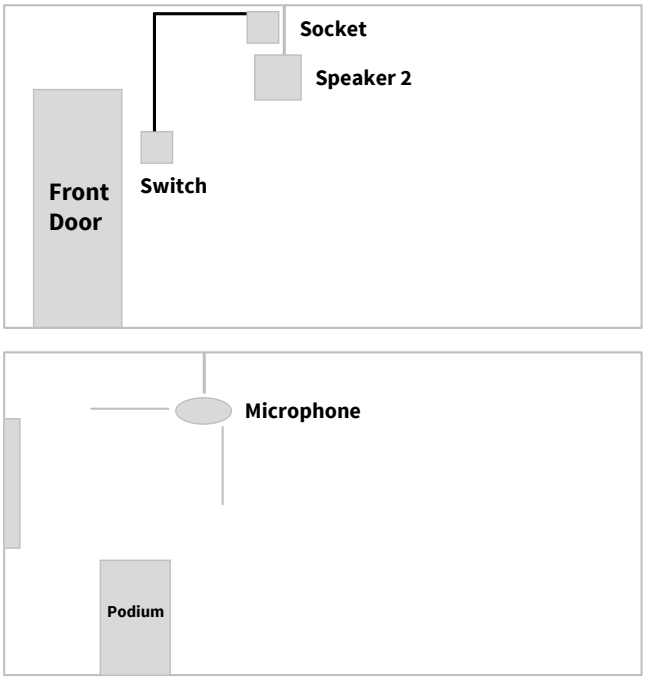


Side View

# 9 Classroom Installation

## 9.1 Microphone Installation

1) **Installation Height:** In theory, the closer the microphone is to the speaker, the better, but considering that it is too low, there may be a risk of students accidentally reaching out and hitting the speaker, causing damage or falling. principle, while considering security and flexible processing.
2) **Installation Method and Location:** It is hoisted with a boom, and the position near the podium is centered horizontally, and the microphone disk is facing the podium area, focusing on picking up the teacher's lecture sound in the podium area.

## 9.2 Speaker Installation

1) **Installation Height:** The recommended height from the ground is 2.0m-2.6m.
2) **Installation Method and Location:** It is wall mounted with brackets. It is recommended to install it in the middle and front of the walls on both sides of the classroom.

## 9.3 Socket Installation

An optional socket panel with a USB socket can be installed next to the speaker for easy access to the microphone and speaker. It can also be powered by a USB adapter or directly use a device with a USB interface (TV or large display, etc.).

**Notice**

When the microphone and speaker are connected to the same wall plug for power supply, the microphone and speaker need to be turned on or off at the same time.

## 9.4 Switch Installation

You can choose a single switch panel, installed on the side of the door or the blackboard, with a label, easy for teachers to open and close.

# 10 Problem and Solution

1) **Howling appears at startup**
   For example, it is normal for the microphone to whistle slightly when it is just started. When the device is just started, it needs to learn to adapt to the live sound field environment, and it will stop automatically after the learning is completed.
2) **Persistent howling**
   For example, when the USB is connected to the computer, confirm whether the listening function is turned on, and check whether the audio input and output wiring is looped back.
3) **The sound reverberation is not clear**
   First check whether the room is too small and the reverberation is too large, and then check the settings of the power amplifier or speaker EQ to see if the low frequency part is adjusted too much.