DTI-A42, DTI-A42LR

Seamless Switching Media Hub



Warning

- Do not expose this device to Rain, Moisture, and Dripping
- Only use accessories specified by the manufacture
- Unplug this device during Lightning Storms
- The manual is for reference only, maybe updated without further notice

Content

1. FEATURES 3
2. PANEL LAYOUT 3
3. EDID AND HDCP HANDLE 6
4. VIDEO AND AUDIO 6
5. SPECIFICATION 7
6. PACKAGE CONTENTS 7
7. MOUNTING DIMENSIONS 8
8. RS232 COMMAND 8

Introduction

The seamless switching media hub has 2x HDMI2.0 Input ports，1x USB-C (video and audio only) Input port，1x HDMI output port and 1xHDBaseT mirror output port.
It integrated with AC port, LAN port,5V/2A charging port. User can easily manage it via the front buttons, RS232 commands.

1. Features

- 2x HDMI and 1x USB-C (video and audio only) Inputs, support input video resolution up to 3840x2160@60
- 1x HDMI and 1x HDBaseT mirror outputs，support output video resolution up to 3840x2160@60
- 1xAC port，2x LAN ports，1x 5V/2A Charging USB-A port
- Support seamless switching
- Support Auto Switching
- Support LPCM, AC3, DD+, DTS, DTS-HD, up to 7.1 audio channel
- Extensive EDID and HDCP control
- HDBaseT transmission length:
  DTI-A42: up to 70m @1080p, or 40m @4K
  DTI-A42LR: up to 100m @1080p, or 70m @4K

2. Panel Layout

Front Panel

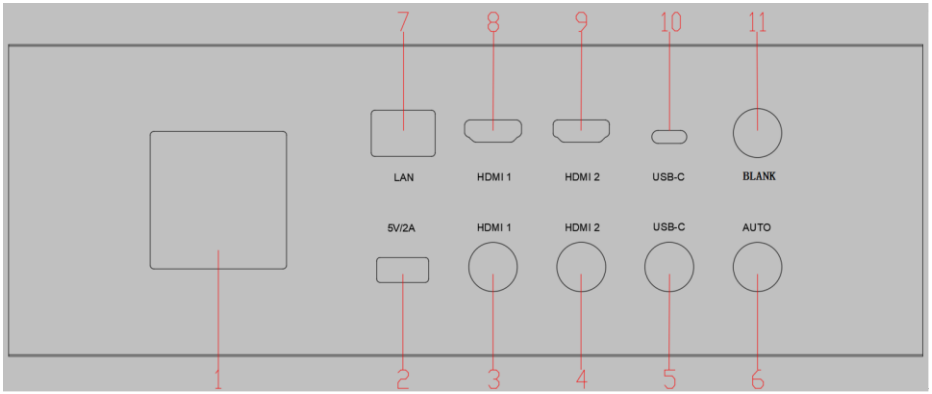

NO.	Name	Description
1	AC Port	AC Port
2	5V/2A	USB-A Port，Support 5V/2A Charging
3	HDMI 1	HDMI 1 Input signal selection button（with Led inside） Press and hold this button twice in a row for at least 3 seconds each time will change the output resolution to 3840*2160@60
4	HDMI 2	HDMI2 Input signal selection button（with Led inside） Press and hold this button twice in a row for at least 3 seconds each time will change the output resolution to 3840*2160@50 Hz
5	USB-C	USB-C Input signal selection button（with Led inside） Press and hold this button twice in a row for at least 3 seconds each time will change the output resolution to 3840*2160@30 Hz
6	AUTO	Press AUTO button to enable or disable auto switching function (with Led inside) Press and hold this button twice in a row for at least 3 seconds each time will change the output resolution to 1080P@60 Hz
7	LAN	LAN port，directly connect to the LAN port on the Rear Panel
8	HDMI 1	HDMI 1 Input port
9	HDMI 2	HDMI 2 Input port
10	USB-C	USB-C（video and audio only）input port
11	BLANK	Press BLANK button to mute the video and audio output. The inside Led will be lit when BLANK function is activated. Press and hold this button twice in a row for at least 3 seconds each time will change the output resolution to 1080P@50Hz

Rear Panel

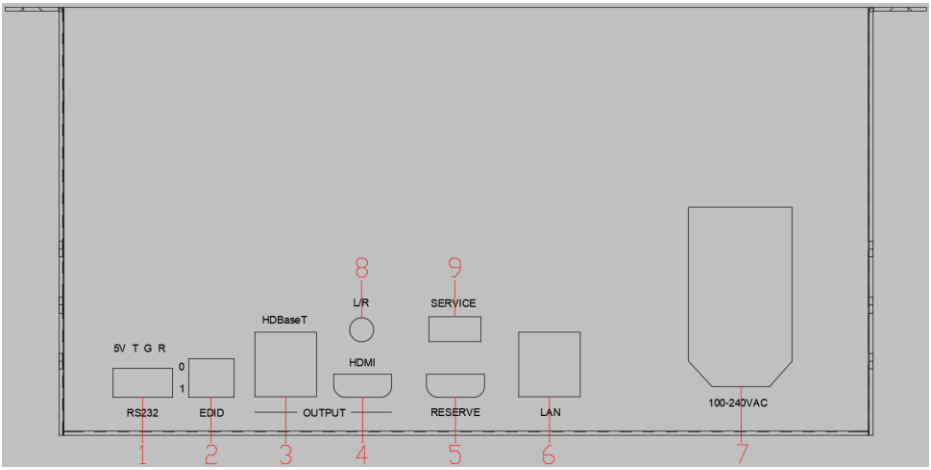

NO.	Name	Description
1	RS232 control	Baud rate 9600, 8 data bits, 1 stop bit, no parity PIN 2 TX (Hub → PC) PIN 3 RX (Hub ←PC) 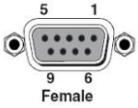
2	EDID Switcher	Select EDID mode See the definition of EDID SWITCH for details
3	HDBaseT out	HDBaseT output port
4	HDMI out	HDMI output port
5	RESERVE	
6	LAN	LAN port，directly connect to the LAN port on the Front Panel
7	100-240VAC	AC Port，Input Voltage Range is 100-240V
8	L/R	3.5mm LR audio output port
9	SERVICE	USB-A port，Used for firmware update

3. EDID and HDCP handle

User can select following EDID modes by RS232 command

Number	EDID mode	Number	EDID mode
1	AUTO	10	1080P-7.1CH
2	4K60-2.0CH	11	720P
3	4K60-5.1CH	12	1920x1200
4	4K60-7.1CH	13	1680x1050
5	4K30-2.0CH	14	1600x1200
6	4K30-5.1CH	15	1440x900
7	4K30-7.1CH	16	1360x768
8	1080P-2.0CH	17	1280x1024
9	1080P-5.1CH	18	1024x768

Before using RS232 command to select the EDID mode, the FOLLOW SWITCH setting must be OFF (refer the RS232 command list)

When the FOLLOW SWITCH setting is OFF, The default EDID mode is 4K60-2.0

The EDID SWITCH is defined as follows

Number	EDID mode	Number	EDID mode
0,0,0,0	AUTO	1,0,0,0	1080P-5.1CH
0,0,0,1	4K60-2.0CH	1,0,0,1	1080P-7.1CH
0,0,1,0	4K60-5.1CH	1,0,1,0	720P
0,0,1,1	4K60-7.1CH	1,0,1,1	1920x1200
0,1,0,0	4K30-2.0CH	1,1,0,0	1600x1200
0,1,0,1	4K30-5.1CH	1,1,0,1	1360x768
0,1,1,0	4K30-7.1CH	1,1,1,0	1280x1024
0,1,1,1	1080P-2.0CH	1,1,1,1	1024x768

To using the bottom EDID switch to select EDID mode, three steps should be taken:

1. The FOLLOW SWITCH RS232 setting must be ON
2. Select the desired EDID mode by the bottom EDID switch
3. The hub must power on again

The HDMI/HDBaseT output support 3 HDCP options: FORCE-1.4, FORCE-2.2, FORCE-OFF, User can select it by RS232 command

4. Video and Audio

The switcher support multiple resolution video input up to 3840x2160@60, and support multiple audio format such as LPCM, AC3, DD+, DTS, DTS-HD, up to 7.1 channel pass through function via HDMI cable

Please note, USB-C input port can only accept LPCM 2.0 audio

The Hub support following video output resolution by a powerful scaling engine

Number	Output Resolution	Number	Output Resolution
1	4096x2160p 60Hz	8	1920x1080p 60Hz
2	4096x2160p 50Hz	9	1920x1080p 50Hz
3	3840x2160p 60Hz	10	1360x768p 60Hz
4	3840x2160p 50Hz	11	1280x800p 60Hz
5	3840x2160p 30Hz	12	1280x720p 60Hz
6	3840x2160p 25Hz	13	1280x720p 50Hz
7	1920x1200p60Hz RB	14	1024x768 60Hz

User can select different output resolution by RS232 command

5. Specification

Band Width	594MHz (18Gbps), HDMI 2.0, HDCP2,2
Audio Format	LPCM, AC3, DD+, DTS, DTS-HD Up to 7.1 channel
Input ports	2x HDMI，1x USB-C
Output ports	1x HDMI 1x HDBaseT 1x 3.5mm LR audio 1x 5V/2A USB-A Charging port
Power Supply	25W max
Operating Temperature	0 to +40°C (+32 to +104 °F)
Operating Humidity	10 to 70 % RH (non-condensing)
ESD	Air: ± 8KV, Contact: ± 4KV

6. Package Contents

Item	Quantity
Hub Unit	1
AC Power Cord	1
User Manual	1

7. Mounting dimensions

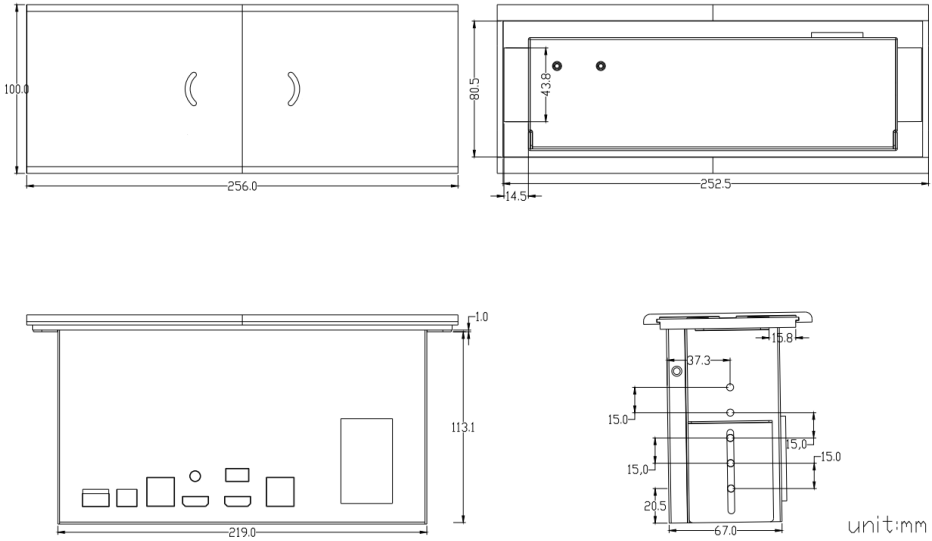

8. RS232 command

Note: All the commands begin with SET or GET, end with Carriage Return (CR).

↵ Represents Carriage Return (CR). All return messages are end with CR

System command

Command	Details
GET HELP↵	Get the Commands list
SET RESET↵	Recover to default setting
GET VERSION↵	Get firmware version Return: VERSION w (w is version number)

Switching command

Commands	Details
SET AUTO SWITCH w↵	w is ON or OFF, default OFF Return: AUTO SWITCH w
GET AUTO SWITCH↵	Return: AUTO SWITCH w
SET IN SOURCE w↵	w is one of the following: HDMI1, HDMI2, USB-C Return: IN SOURCE w
GET IN SOURCE↵	Get current input channel selection information

	Return: IN SOURCE w
GET IN RESOLUTION↵	Get current input resolution Return: IN RESOLUTION w (w is input resolution)
SET FOLLOW SWITCH w	w is ON or OFF, default ON Return: FOLLOW SWITCH w
GET FOLLOW SWITCH	Return: FOLLOW SWITCH w

Output command

Commands	**Details**
SET OUT RESOLUTION w↵	w is one of the following, default: 3840x2160p60 4096x2160p60, 4096x2160p50, 3840x2160p60, 3840x2160p50, 3840x2160p30, 3840x2160p25, 1920x1200p60RB, 1920x1080p60, 1920x1080p50, 1360x768p60, 1280x800p60, 1280x720p60, 1280x720p50, 1024x768p60 Return: OUT RESOLUTION w
GET OUT RESOLUTION↵	Get current output resolution setting Return: OUT RESOLUTION w
SET OUT HDCP w↵	w is one of following, default FORCE-1.4 FORCE-1.4,FORCE-2.2,FORCE-OFF Return: OUT HDCP w
GET OUT HDCP↵	Return: OUT HDCP w
SET OUT VKA w↵	w is BLUESCREEN or BLACKSCREEN. Default BLACKSCREEN. It is for no signal display Return: OUT VKA w
GET OUT VKA↵	Return: OUT VKA w
SET BLANK-OPT w↵	w is VKA or OSD, default VKA When select VKA, if user press front button BLANK or set RS232 command SET SHOWME OFF, then the screen will display VKA mode BLACKSCREEN or BLUESCREEN When select OSD, then after the same operation the screen will show OSD

GET BLANK-OPT↵	Return: BLANK-OPT w
SET SHOWME w↵	w is ON or OFF, default ON This command mute or unmute the video and audio output The function is the same as front BLANK button
GET SHOWME↵	Return: SHOWME w
SET OUT ITC w↵	w is ON or OFF, default OFF Return: OUT ITC w
GET OUT ITC↵	Return: OUT ITC w

EDID command

The following commands are used to set EDID mode for the inputs

Commands	**Details**
SET IN EDIDMODE w↵	w is one of the following: 4K60-2.0, 4K60-5.1, 4K60-7.1, 4K30-2.0, 4K30-5.1, 4K30-7.1, 1080p60-2.0,1080p60-5.1, 1080p60-7.1,1920x1200, 1680x1050, 1600x1200, 1440x900, 1360x768, 1280x1024, 1024x768, 720p, AUTO Default: 4K60-2.0 Return: IN EDIDMODE w
GET IN EDIDMODE↵	Return: IN EDIDMODE w