adertech

ROYAL 4IN 1812

LED PAR LIGHT-1812

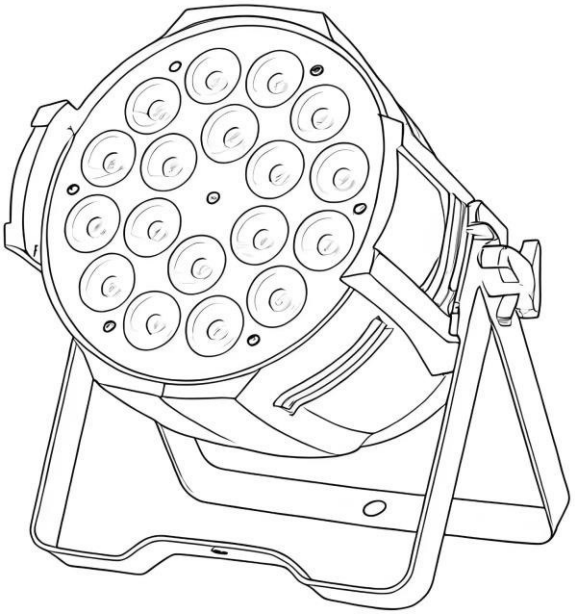

User manual

SAFETY INSTRUCTIONS

This device has left the factory in perfect condition. In order to maintain this condition and to ensure a safe operation, it is absolutely necessary for the user to follow the safety instructions and warning notes written in this user manual.

When unpacking and before disposing of the carton, check there is no transportation damage before using the product. Should there be any damage caused by transportation, consult your dealer and do not use the apparatus.
The device only can be use indoors.
The device is not designed or intended to be mounted directly on to inflammable surfaces.
The device is only intended for installation, operation and maintenance by professional person.
Avoid direct exposure to the light from the lamp. The light is harmful to the eye.
Do not attempt to dismantle or modify the projector in any way.
Electrical connection must only be carried out by qualified personnel.
Before installation, ensure that the voltage and frequency of power supply match the power requirements of the projector.
It is essential that each device is correctly earthed and that electrical installation conforms to all relevant standards.
Do not connect this device to any other types of dimmer apparatus.
Make sure that the power-cord is never crimped or damaged by sharp edges. Never let the power-cord come into contact with other cables. Only handle the power-cord by the plug. Never pull out the plug by tugging the power-cord.
LED lens shall be changed if they have become visibly damaged to such an extent that their effectiveness is impaired, for example by cracks or deep scratches.
Exterior surface temperatures of the luminaire after 5 minutes operation is 50°C，when steady state is achieved 65°C.
There is no user serviceable parts inside the projector, do not open the housing and never operate the device with the covers removed.
If you have any questions, don’t hesitate to consult your dealer or manufacturer.

Always disconnect from the mains, when the device is not in use or before cleaning it or before attempting any maintenance work!

Installation:

1. In order to secure the safe installation of the light, always use it in the well-ventilated environment.
2. Always keep this light with a safe distance from any flammable materials.
3. Never install, dismantle and maintain this light when it is powered; and all work aforesaid must be conducted by professionals.
4. The packing list of this light is as follows:
1) Light ----------1pcs
2) User Manual----------1pcs

Effect:

1. This light operation is very simple, Attractive appearance, Humanized design, Dim without flicker and shake, Energy-efficient, Durable. It is suitable for photography, television stations, stage, dance hall, KTV, bar, evening show.
2. The program of this light can automatically operate, sound, accept DMX512 signal control and be connected for use.

Graphic Part:

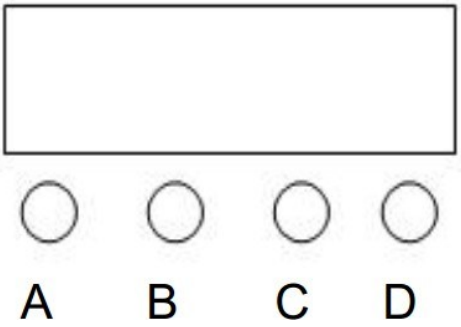

A. function button
B. UP
C. DOWN
D. Enter

Operation description：Press "**A**" will cycle out 12pcs different functional effect, LED Top row in represent the current function（Reference function table）。LED Top row on behalf of the function in the address code、or speed and other parameters。Press **B** or **C** key can modify the parameter value。Press **D** to confirm。

Display Menu（All the functions are selected, press D to confirm.）

No.	Display	Function
1	A001	A001—A512 (10 channel) press “UP” and “Down” button change the DMX address
2	d001	d001—d512 (6 channel) press “UP” and “Down” button change the DMX address
3	CC50	CC01—CC99 (Color change by Snapping), press “UP” and “Down” button change the snapping speed
4	CP50	CP01—CP99 (Color change by Fade), press “UP” and “Down” button change the Fade speed
5	DE50	DE01--DE99 (Color change by Pulse), press “UP” and “Down” button change the Pulse speed
6	SOUD	Sound mode
7	R000	R000—R255 (Red dimming by hand)
8	G000	G000—G255 (Green dimming by hand)
9	B000	B000—B255 (Blue dimming by hand)
10	W000	W000—W255 (Whiter dimming by hand)
11	Y000	Y000—Y255 (Amber dimming by hand)
12	P000	P000—P255 (Purple dimming by hand)

Attention:

1. Setting DMX address by button

1). press **MODE** button when show the **A001** menu, then adjust the DMX address by pressing **UP** or **DOWN** button

2).Press **ENTER** to confirm or pressing **MODE** to return to main menu**.**

Cleaning and Maintenance

We recommend a frequent cleaning of the device. Please use a soft lint-free and moistened cloth. Never use alcohol or solvents!

CAUTION!

Disconnect from mains before starting maintenance operation.

There are no serviceable parts inside the device. Maintenance and service operations are only to be carried out by authorized dealers.
If you need any spare parts, please use genuine parts.

If the power supply cable of this device becomes damaged, it has to be replaced by authorized dealers only in order to avoid hazards.
If you have further questions, please contact your dealer.

DMX Functions and Values

10channel (A001)

Channel	Value	Function
CH1	0-255	Main dimming from dark to bright
CH2	0-255	Control strobe from slowly to quickly
CH3	0-5	DMX channel control
	6-100	Color change by Snapping
	101-150	Color change by Fade
	151-200	Color change by Pulse
	201-255	Sound control
CH4	0-255	The speed of function from slowly to quickly
CH5	0-255	R dimming from dark to bright
CH6	0-255	G dimming from dark to bright
CH7	0-255	B dimming from dark to bright
CH8	0-255	W dimming from dark to bright
CH9	0-255	A dimming from dark to bright
CH10	0-255	P dimming from dark to bright

6channel (d001)

CH1	0-255	R dimming from dark to bright
CH2	0-255	G dimming from dark to bright
CH3	0-255	B dimming from dark to bright
CH4	0-255	W dimming from dark to bright
CH5	0-255	A dimming from dark to bright
CH6	0-255	P dimming from dark to bright

Technical Parameters:

Voltage: AC100-240V, 50Hz/60Hz
Power Consumption: 180 Watts
LED: 18PCS 10W 6IN1 LED
LED Current: 500 mA / 1 pc
LED Beam Angle: 25°
LED Lifetime: 80,000-100,000 hours
Color: RGBWA+UV color mixing
Dimming: 0-100% with regulated constant color control
Strobe: 10 Flashes per second (any color)
Operation Modes: DMX512, Manual, Sound, Master-slave,Auto
DMX Control: 6/10 Channels
Control Panel: Digital 4 Character Alphanumeric
Maximum Ambient Temperature: 40° C
Gross Weight: 3.2 kg
Package Size: 25.5 x 25.5 x 36.5cm



WARNING

- ✧ Before open the LED par light and if you want to do the repair work, please make sure the power source is at the separation condition.

- ✧ Unceasingly carries on the product improvement about our company the policy, in this instruction booklet carries the data will have the possibility to be able to change in the future, when no longer separate notice change matters concerned. Our company retains when the product improvement changes the related specification the authority. This instruction booklet publisher cannot be responsible regarding this instruction booklet in information accuracy, also cannot the related consequence which causes regarding these information be responsible.