TRIPLE-6

The TRIPLE-6 50W outdoor waterproof speaker delivers exceptional clarity and powerful bass with its 6.5"×1 woofer and 1"×1 tweeter, covering a frequency response from 65Hz-20kHz. With 87dB sensitivity and a maximum SPL of 104dB, it ensures efficient and dynamic sound projection. Housed in an IP66-rated, all-weather enclosure, it is perfect for reliable performance in any outdoor or indoor environment.



- Specialized in sound quality, featuring a passive radiator and equipped with both tweeter and woofer units to deliver clear, transparent, and bright sound with rich, powerful bass.
- Streamlined design, smooth and elegant curves, stylish and classy outlook.
- Available in black and white, suitable for the decorative styles of different venues.
- Mesh: Made of 1060 pure aluminum, which is hardened and anti-oxidation treated, not easy to deform and never rust.
- Speaker box: Made of polymer engineering plastics, durable, safe and reliable.
- Speaker unit: The tweeter diaphragm is made of transparent silk membrane; the woofer diaphragm is made of polypropylene with large magnetic circuit.
- Mounting bracket: Cast aluminum molding, no oxidation and rust, safe and durable, multi-angle adjustment, easy to install and use.
- Waterproof level: IP66 waterproof level, all-weather design, to ensure the reliable use in indoor and outdoor environments.

Specification:

SKU	**TRIPLE-6**
Type	Wallmount Speaker
Rated Power	50W
Input Options	8Ohm / 100V
Transformer Taps 100V	3.2W / 6.3W / 12.5W / 25W / 50W
Ways	2
Drivers	6.5" weatherproof woofer
	1” silk tweeter
Effective frequency range	65 - 20KHz
Sound Pressure	104dB
Level Sensitivity	87dB, measured at 1W/m
Waterproof degree	IP66
Material	ABS enclosure, aluminum grille & aluminum mounting bracket
Operating Temperature	-20℃~+50℃
Finished colour	White (TRIPLE-6W), Black (TRIPLE-6B)
Mounting bracket	Included
Dimension	300×200×233mm (without bracket)
Weight	4.3kg

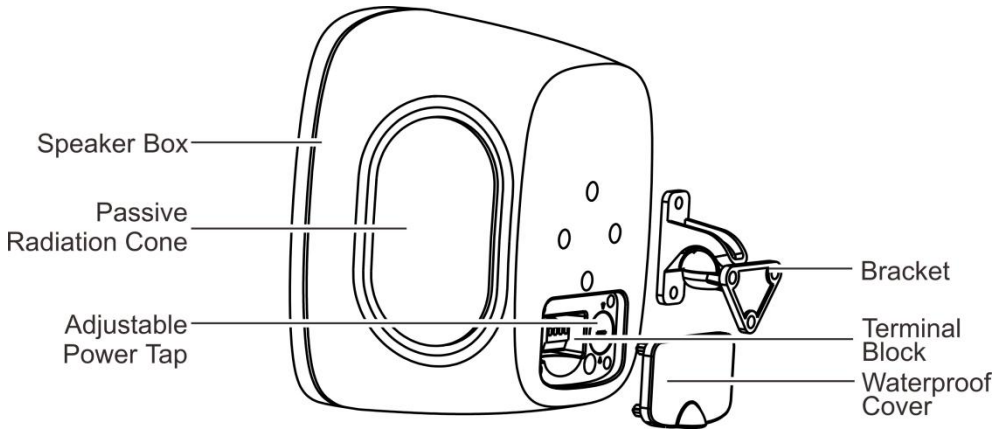

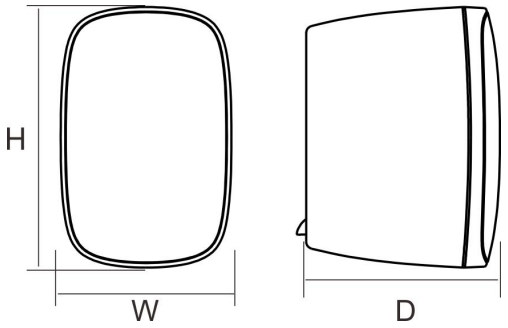

H	W	D
300mm	200mm	233mm

Frequency Response

(dB SPL, 1W, 1m)

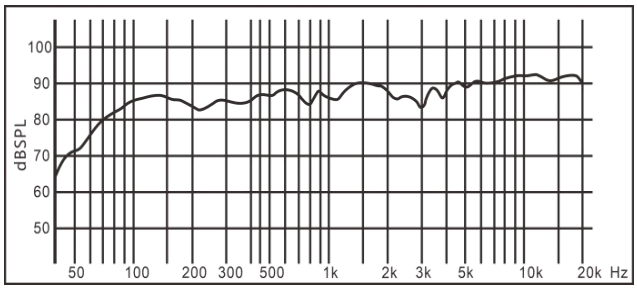

Distortion

(THD＜3% 1W, 1m, 100Hz-10kHz)

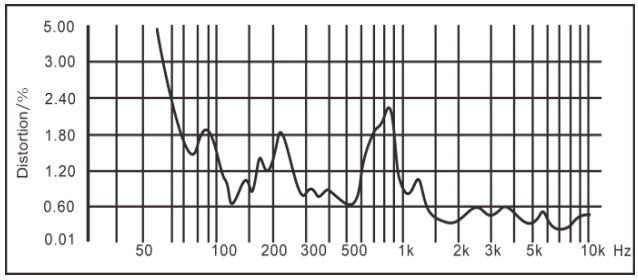

Vertical Directivity Pattern

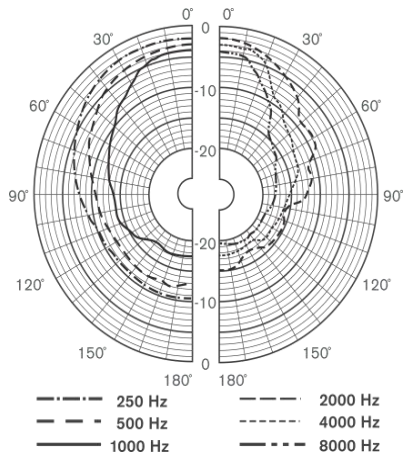

Horizontal Directivity Pattern

