adertech

MOTOH 400

400W LED BAEM SPOT WITH CMY

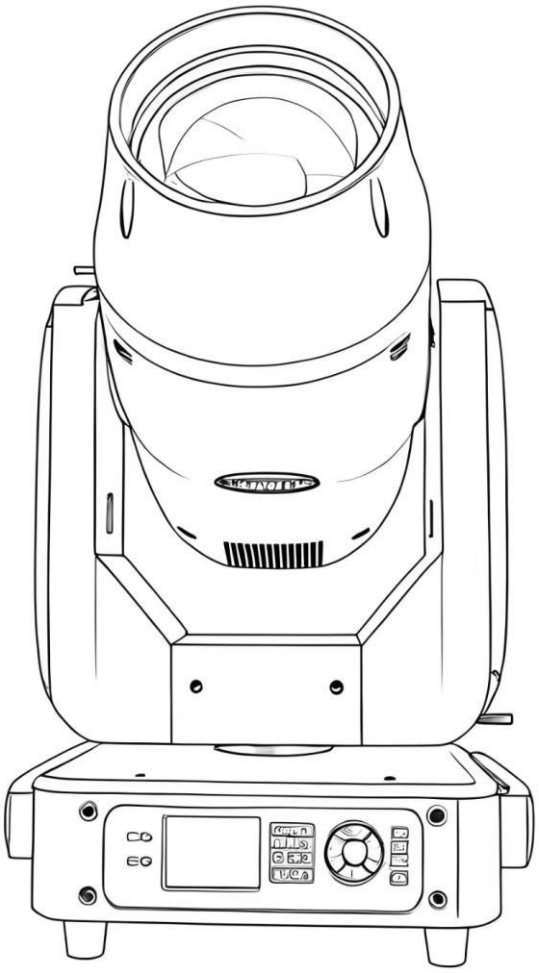

User manual

Catalogue

Chapter **Page**

Safe Usage Of The Product ----------1
Install The Equipment ----------2
Power Code Connection ----------3
DMX Connection ----------3
DMX Terminator ----------4
Function Set ----------5
Operation Menu ----------5
Control panel of LED display information---------- 12
Trouble Shooting----------12
Maintenance ----------12
Keeping The Product Clean ----------12
Equipment and Appendix----------13
Channel List----------13
Gobo and color----------16
Product Drawing ----------17
Technical Parameters----------18

☆**Important notice:**

· In this instruction for use contains about the installment and the use aspect important information of the moving head. When installing and using, you need to look this usage instruction strictly.

· Before open the moving head and if you want to do the repair work, please make sure the power source is at the separation condition.

· Every unit is tested completely and packed properly by the manufacturer. Please make sure the packing and the unit are in good condition before installation and use. Should there be any damage caused by transportation, consult your dealer and do not use the unit. Any damage caused by improper use will not be assumed by the manufacturer or dealer.

Attention: Unceasingly carries on the product improvement about our company the policy, in this instruction booklet carries the data will have the possibility to be able to change in the future, when no longer separate notice change matters concerned. Our company retains when the product improvement changes the related specification the authority.

SAFE USAGE OF THE PRODUCT

When unpacking and before disposing of the carton, check there is no transportation damage before using the product. Should there be any damage caused by transportation, consult your dealer and do not use the apparatus.
The product is for indoor use only, IP20. Use only in dry locations. Keep this device away from rain and moisture, excessive heat, humidity and dust. Do not allow contact with water or any other liquids.
The product is not designed or intended to be mounted directly on to inflammable surfaces
The product is only intended for installation, operation and maintenance by professional person.
The product must be installed in a location with adequate ventilation, at least 50cm from adjacent wall surfaces. Be sure that no ventilation slots are blocked.
Do not product the beam onto inflammable surfaces, minimum distance is 5m.
Avoid direct exposure to the light from the lamp. The light is harmful to the eye.
Do not attempt to dismantle or modify the projector in any way.
Electrical connection must only be carried out by qualified personnel.
Before installation, ensure that the voltage and frequency of power supply match the power requirements of the projector.
It is essential that each projector is correctly earthed and that electrical installation conforms to all relevant standards.
Do not connect this device to any other types of dimmer apparatus.
Make sure that the power-cord is never crimped or damaged by sharp edges. Never let the power-cord come into contact with other cables. Only handle the power-cord by the plug. Never pull out the plug by tugging the power-cord.
Keep the light clean. Do not touch the light glasss with bare hands.
The product should always be installed with a secondary safety fixing. On the projector base brink, there is a hole for the safety cord provided. It should be attached as shown in “installing the projector” section.
The lens shall be changed if they have become visibly damaged to such an extent that their effectiveness is impaired, for example by cracks or deep scratches.
Exterior surface temperatures of the luminaire after 5 minutes operation is 40° C，when steady state is achieved 50°C.
There is no user serviceable parts inside the projector, do not open the housing and never operate the product with the covers removed.
If you have any questions, don’t hesitate to consult your dealer or manufacturer.

★Always disconnect from the mains, when the device is not in use or before cleaning it or before attempting any maintenance work !

Install The Equipment:

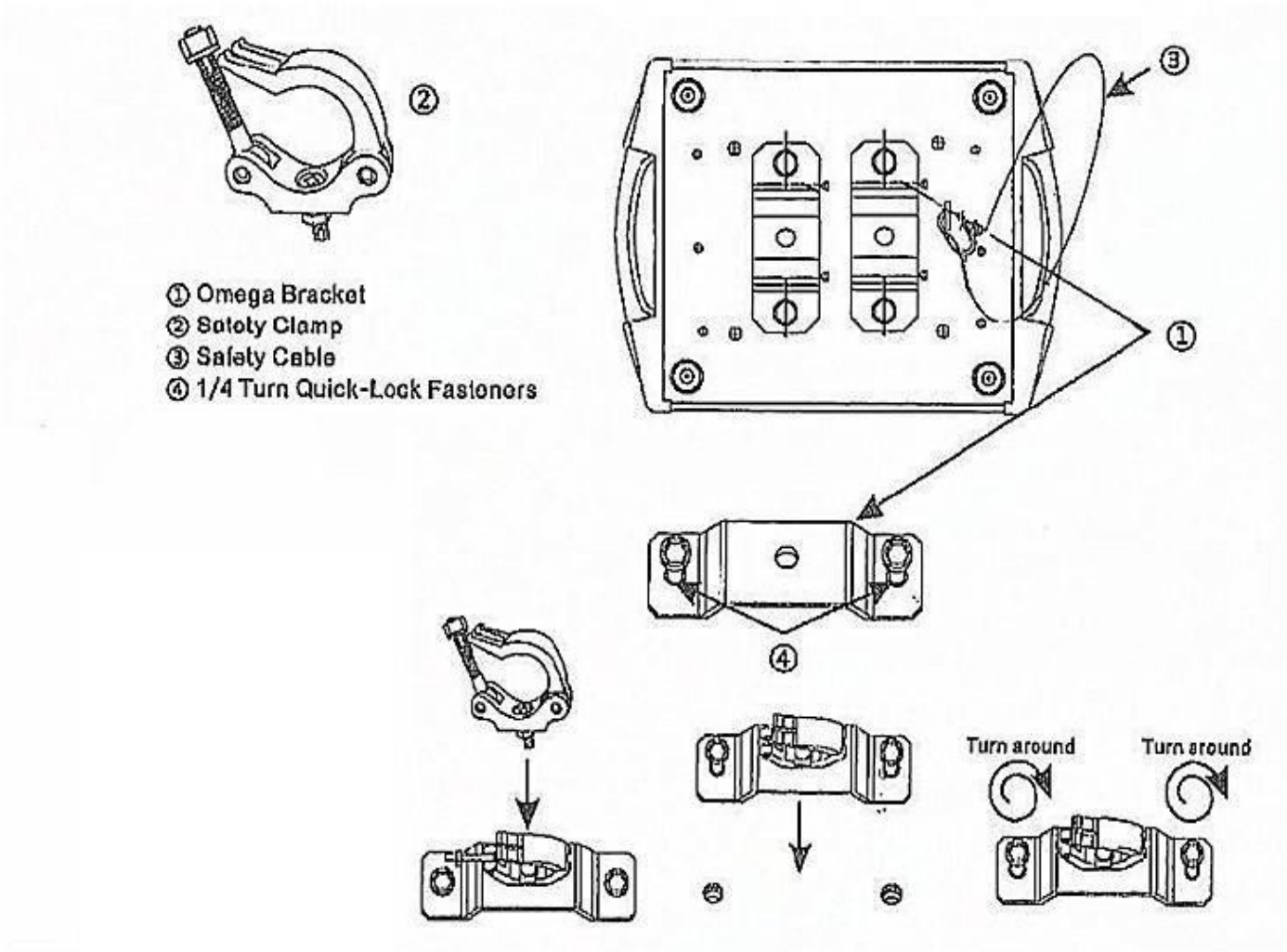

Use 2pcs clamp and 1safety cord (need to purchase). Use clamp fix with light hook which in the packing box with light, then use screw install to the bottom of lamp. Hang the fixture on the structure and fasten the screws attached to each clamp. Make sure the light is installed reliable, and confirm the light which you fixed is strong enough for hanging the light. Base on safety reason, please according to the above picture using safety wire cross the light to make it strong enough again.

Warning!

1. Unlock the PAN and TILT before the 1st application of the light for safety.
2. Hook and clamp only use for hanging the light. Do not use clamp as a tool to move fixtures.
3. Base on safety reason, please use the safety cord which can afford the weight ten times of lamp through Insurance hole for auxiliary hanging.
4. Don't use the handle of the moving head light to fixed or lift!

Power Code Connection:

Connect the power cord as follows:

L (live) =brown
E (earth) =yellow/green
N (neutral) =blue

Use the plug provided to connect the mains power to the projector paying attention to the voltage and frequency marked on the panel of the projector. It is recommended that each projector be supplied separately so that they may be individually switched on and off.

★ It is essential that each projector is correctly earthed and the electrical installation conforms to all relevant standards.
★Please do NOT connect the power cable hand by hand over 3pcs.

DMX Connection:

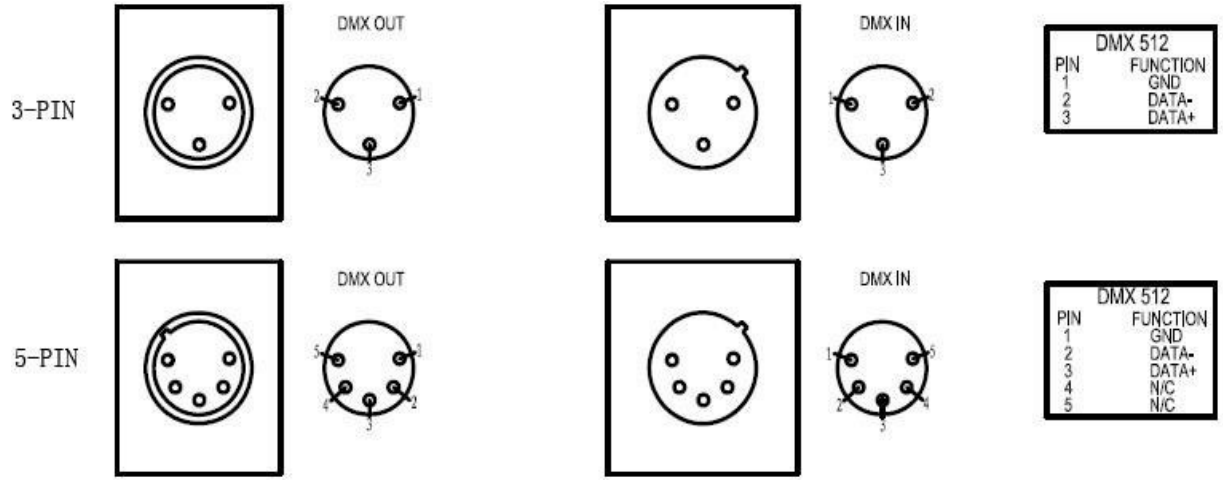

Connection between the controller and a projector and between one projector and another must be made with a 2 core-screened cable, with each core having at least a 0.5mm diameter. Connection to and from the projector is via cannon 3 pin (which are included with the projector) XLR plugs and sockets. The XLR's are connected as shown in the figure above.

Note: Care should be taken to ensure that none of the pins touch the metallic body of the plug or each other. The body of the plug is not connected in any way. The XLED 590 accepts digital control signals in protocol DMX512 (1990).
Connect the controller's output to the first fixture's input, and connect the first fixture's output to the second fixture's input and connect the rest fixtures in the same way. Eventually connect the last fixture's output to a DMX terminator as shown in the figure below.

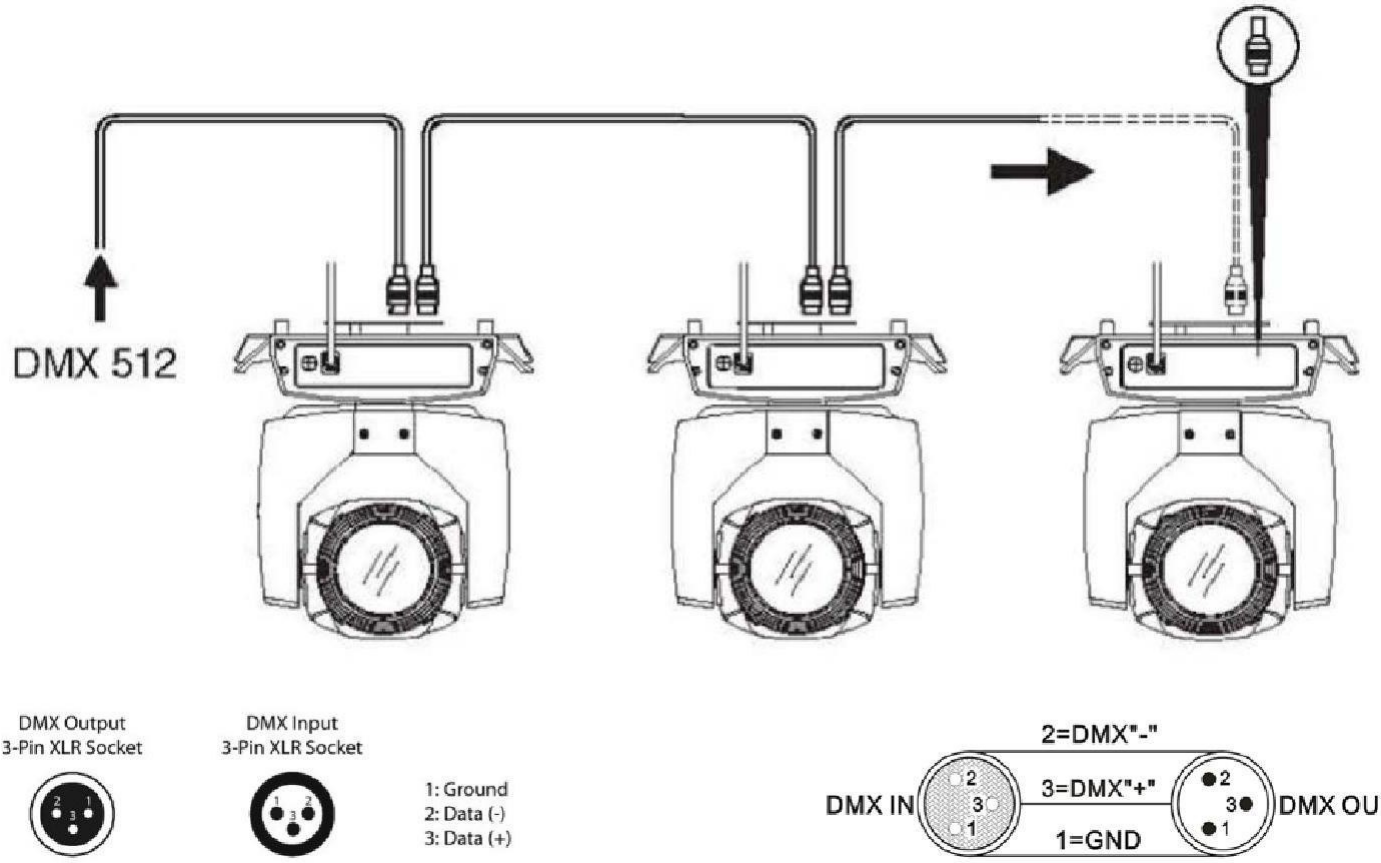

DMX Terminator:

In the Controller mode, at the last fixture in the chain, the DMX output has to be connected with a DMX terminator. This prevents electrical noise from disturbing and corrupting the DMX control signals.

The DMX terminator is simply an XLR connector with a 120Ω (ohm) resistor connected across pins 2 and 3, which is then plugged into the output socket on the last projector in the chain. The connections are illustrated below.

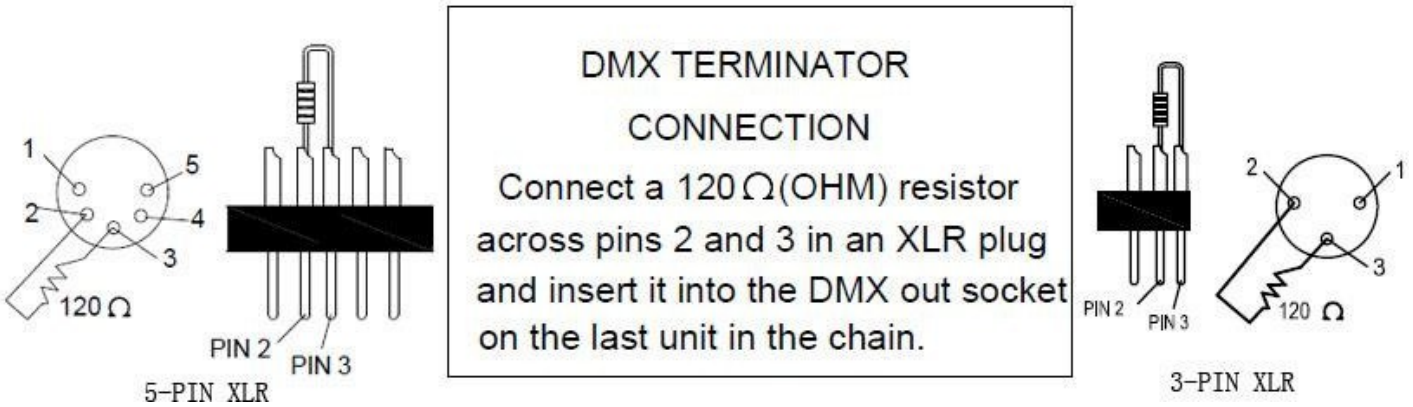

Function Set: (The main board as shown below:)

Light panel schematic diagram is shown in Picture. Above title display light name. Below is the status bar,show current light signal, lamp status, fault(When there is a fault message not viewed, display“ERR”， no is display “NOR”). etc.
This light supports the DMX/RDM protocol. When the light is searched by the RDM host, the panel will display the three letters "RDM". It means the light connect with RDM.
The display and operation are similar to "Android operating system", and you can operate it by clicking the corresponding item with your fingertip or a blunt object.
Note: Do not tap the display with a pointed or sharp object to prevent damage.

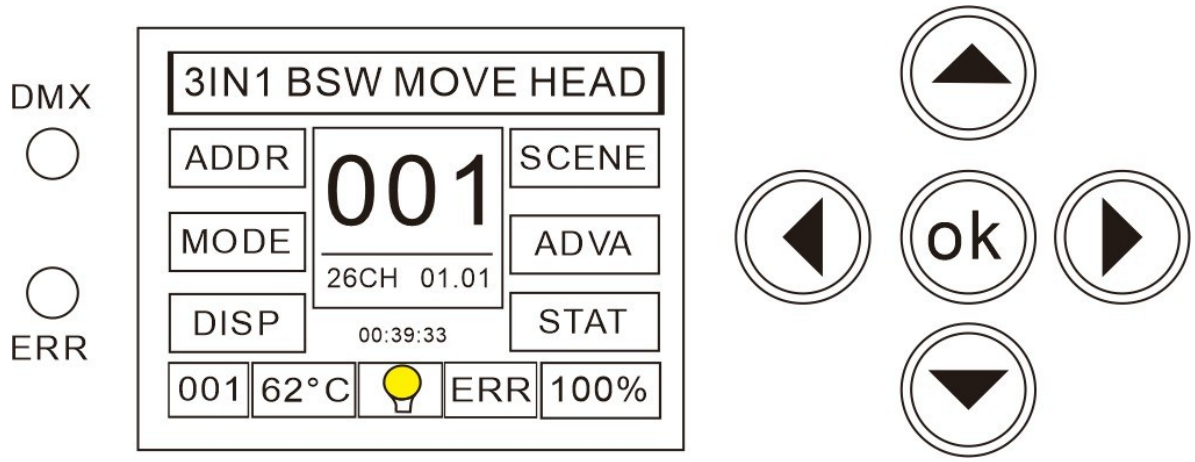

Use button switch can set the address code and function code easily.
Check or modify lighting function settings, Press the any button. LCD display panel will display main menus. Function operation menu all have corresponding submenu . Each menu all represent the specific functions of lamps, specific see below "operation menu" section.
Set or browse function setting of lamp, Press UP ,DOWN or RIGHT key.
Press OK key to save your changes or to enter submenu, Press UP or DOWN can change value(Plus or reduce number).

Operation Menu:

1. **Operate the light with touch or button**
   The left area is TFT Displayer and touch, chick item or value with finger will to complete operation of set light setting(parameters) or view light state.
   The area on the right hand side is 5 KEY, As auxiliary input interface, if disable touch function,, the KEY button can been choose to set the parameter.

2. Parameter value input

When the selected parameter item needs to input a value, the window shown in picture will open as below:

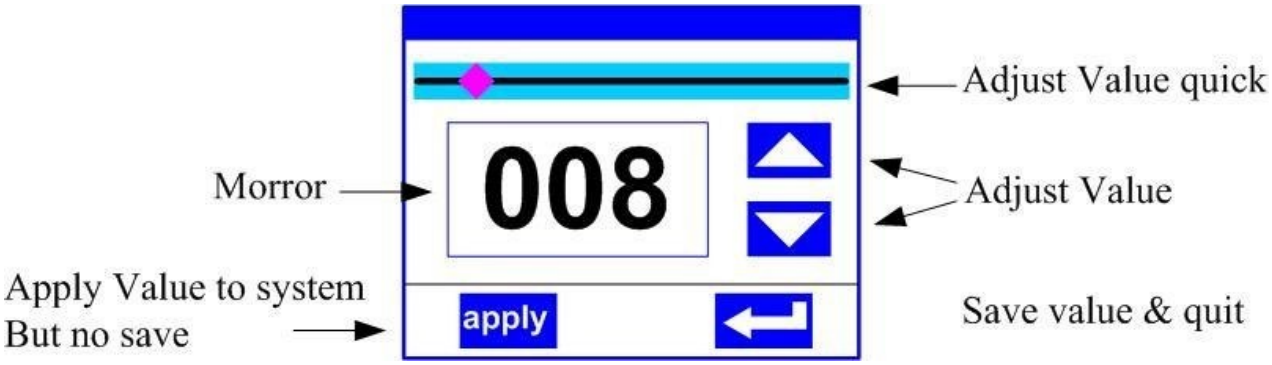

- **Set the value:** you can click the “Up” or “Down” button on the right to set the desired value precisely
- **Application value:** When setting the data with the "Up" or "Down" buttons, the value is sent to the fixture immediately, but the value is not saved.
- **Save the value:** at any time, click the "OK" button, then save the current value to the internal storage. The next time you turn it on, the saved value is applied to the fixture.

3. Set the Boolean parameter

- When the set parameter is Boolean (such as ON or OFF), then directly click on the corresponding item to switch the parameter value. This type ofparameter will be saved to the internal storage after modification. Press the parameter option on the right, the corresponding option will be grayed out. When the hand is released, the corresponding parameters are changed and saved. If the parameter option is pressed, it is not the parameter you want to change. At this point, you can move your finger to other parts of the screen. The corresponding parameters will not change.
- The determination of important Boolean parameters will pass, Determine the window to set, as shown in picture below:

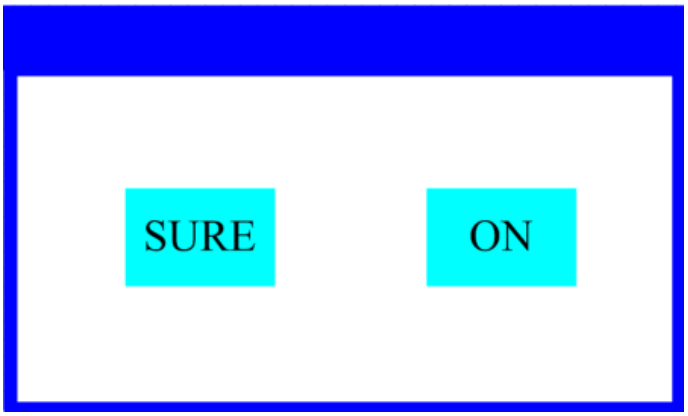

4. Subpage (parameters)

Chick item of main menu, enter corresponding sub menu, shown in 错误!未找到引用源。, total 6 sub menu, includes class of parameter and status:

- ADDRESS：Set light DMX address.
- WORKMOD：Set light work mode, master or slave mode when in auto run mode.
- DISPLAY： Set display parameter, eg. select language.
- TEST：Used for test light, modify DMX channel data to test function， the corresponding function of reference channel function table.
- ADVANCE：Set light running parameter.
- STATUS：view light current status.

Figure 1-1

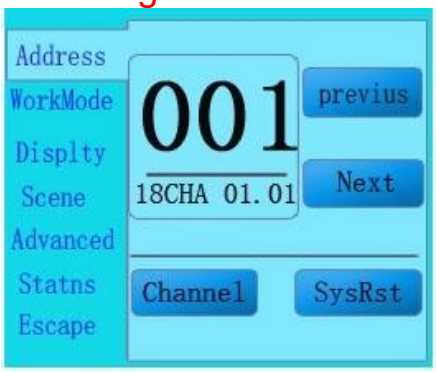

Figure 1-2

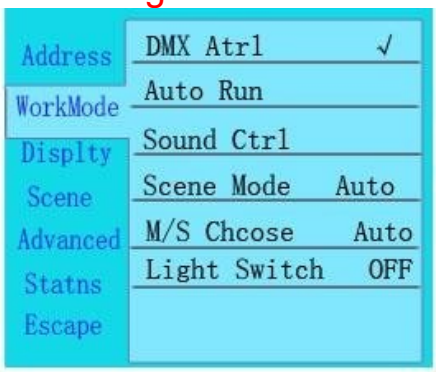

Figure 1-3





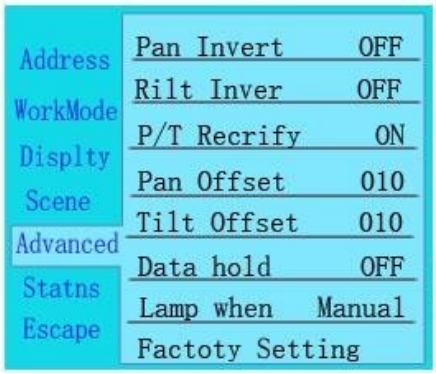



Figure 1-4 Figure 1-5 Figure 1-6

5. Function operation and parameter setting

Enter the settings interface, as shown in Figure 1-1:

- In the main interface, you can enter the corresponding parameter setting interface by selecting six buttons.
- In the parameter setting interface, you can quickly switch to other setting interface by pressing the blue option on the left.

1. Set the DMX address code

The DMX address, channel mode, etc. of the light can be set through the page shown in Figure 1-1.The menu settings of the light optimize the setting of the address, several settings for address codes are as follows:

- Select “last light” or next light”, the fixture will be based on the current address code and channel data. Automatically calculate the address code of the next or previous station ,can be set quickly;
- Click on the address code value, Can enter the value editing window, Here you can set any valid address code. The light automatically obtains the current DMX channel of the light. Automatically filter unusable address codes (512 - current channel number).
- The light supports the RDM protocol. The fixture address code can be set remotely via RDM. Provide two buttons:
- Channel mode: 22/26 channel modes can be choose;
- Lamp reset: reset all motors.

2. Set the light work mode

You can set the light control mode and lamp control by the page shown in Figure 1-2.The light supports 4 control modes(DMX mode, auto running mode, voice control mode and scene mode). For detailed parameter value setting, please refer to the previous section. The specific parameters are described in the following table:

Work Mode

DMX Ctrl	Control mode，receive DMX signal，RDM signal	
Auto Run	The light runs automatically according to the built-in program	
Sound Ctrl	When the luminaire detects a strong sound, the fixture automatically runs a scene in accordance with the built-in program. Otherwise keep the last scene.	
Scene Mode	Run in the set scene mode, support up to 10 scenes of custom editing	
	1~10	Output the specified scene
	Auto	Automatically loops the scene in the set scene time (non-zero), and the scene with time 0 automatically skips the ignore. (**Default**)
M/Schoose	Effective in non-DMX mode, select the mode of data output, The light automatically detects the DMX status and automatically switches the output to prevent data conflicts.	
	Master	The light runs as built-in，If the DMX has no signal, then output data (synchronized), otherwise no data is output
	Slave	The light runs in built-in mode and no output data (not synchronized with other luminaires)
	Auto	If the DMX has no signal, the light operates as built-in. Otherwise, the light works according to the DMX signal. (**Default**)

Scene mode for single or small fixtures, just output a fixed scene, or need to run a simple program,can not be connected to the console, edit it in the scene page.

3. Panel display settings

The light support Chinese and English language, upside down display, etc., enter the corresponding parameter settings as shown in Figure 1-3. The specific menu contents are as follows:

Display mode

Language	Set the displayed language	
	English	English display
	中文	Chinese display
Screen Saver	Set the screen display content or mode after no operation for 30 seconds	
	OFF	Keep the last action page, bright screen
	Mode 1	Power-saving mode, turn off the display.
	Mode 2	Black screen, showing the address code of the current fixture in the lower left corner
	Mode 3	Display trademark information, address code and operation mode (**Default**)
Screen Rot	Set the display orientation of the screen	
	Forward	Don't reverse display
	Reverse	Reverse display
	Auto	Automatically detect the direction of the light hanging light, automatically switch the display direction (**Default**)
DMX Instruction	Set the indication mode of the DMX signal indicator	
	Mode 1	Bright when there is a signal, and goes off when there is no signal
	Mode 2	Goes Off when there is a signal, bright when there is no signal
	Mode 3	Flicker when there is a signal, and goes off when there is no signal
Signal Bright	Set the brightness of the signal indicator after no operation for 10 seconds	
	1-10	10 levels
Screen Light	Set the brightness of the screen backlight after no operation for 10 seconds	
	1-10	10 levels
Touch Enable	Disable or enable touch function	
	ON	Enable touch function.(**Default**)
	OFF	Disable touch function
Screen Light	Set the brightness of the screen backlight after no operation for 10 seconds	
	1-10	10 levels

4. Scene editing mode

Enter the page shown in Figure 1-4. The light enters the scene editing mode. Under this page, the light does not receive the DMX controller data, and the edited data is immediately reflected on the luminaire.

The content of the page is not indented depends on the currently selected channel, and the displayed channel content and order are consistent with the light channel table. Through this page, 10 scenes can be edited, as shown in the following table:

Scene mode

Scene selection	Select the current operation scene	
	1~10	10 scene change
Scene time	Set the retention time of the current scene when it is automatic, in units of 0.1 seconds.	
	0	The current scene does not participate in automatic scene output
	1-255	0.1 second to 25.5 seconds
Pan	0-255	Set the data of each channel, and the display content and sequence correspond to the channel table of the light
……	0-255	
……	0-255	
Reset	0-255	

If the reset channel in the scene edits the valid reset data, the light will reset, but after reset, thevalue of the corresponding reset channel will be automatically cleared to prevent multiple consecutive resets.

Check the page to get the current channel table order of the light. For detailed channel data, please refer to the detailed channel description.

5. Set the working parameters of the light

Enter the page shown in Figure 1-5 to adjust the on-site parameters of the light to facilitate on-site installation of the light:

Advanced mode

Pan Invert	Set the Pan rotation direction	
	OFF	Not reversed (Default)
	ON	Reversed
Tilt Invert	Set the Tilt rotation direction	
	OFF	Not reversed (fault)
	ON	Reversed
P/T Rectify	Set whether the luminaire detects P/T out of step and corrects	
	OFF	Uncorrected position after out of step
	ON	Automatically correct position after out of step and record out of step failure (Default)
Pan offset	Set the position of the X-axis zero point of the fixture	
	4-150	4-150
Tilt offset	Set the position of the Y-axis zero point of the fixture	
	4-150	4-150
Data Hold	Set the output status of the light when there is no DMX signal	
	OFF	When no DMX signal,return to middle position.(Default)
	ON	When no DMX signal,stop in the final position
Scene time	0-255	scene time multiplier
Factory settings	A confirmation box pops up, and after selecting "SURE", the light parameters are returned to the factory settings.	

When the light cannot correct the position, first check if the "optocoupler correction" is turned off.

When the signal is removed, if the position of the light is not as intended, first check the “Data Hold” setting.

When setting the XY offset, after completing the setting, first control the XY with the maximum stroke to check that the X Y does not hit the positioning lever or the housing

6. Check the current status of the fixture

Enter the page shown in Figure 1-6 to view the information and real-time status of the light to know the status of the light. If the light needs to be sold, please provide the status information displayed on the page for judgment. The details are as follows:

Status information

Motor information	Display information status of all motors and signals in the light	
	Hall	Not displayed, indicating that the motor has no Hall correction, 0 means the motor leaves the calibration position, and 1 means the motor is in the correction position.
	Status	Display motor reset completion status
	Pan	Display real-time position values of Pan
	Tilt	Display real-time position values of Tilt
	Optocoupler	Display the level status of two signals of Pan and Tilt optocouplers, binary
Error Logging	Display the last 8 fault records of the light reset and operation. The fault record is not saved after power off, and the power-on cycle is valid.	
	Fault data	Total number of faults detected after power-on
	12:03	Power-on time when the fault occurred, in minutes
	Hall failure	The motor does not detect a valid Hall signal when the motor is reset.
	Hall short circuit	The Hall signal detected when the motor is reset is always valid.
	Optocoupler failure	No valid optocoupler signal detected for motor reset
	Out of step	Corresponding motor out of step during operation
	Bat	Corresponding to the positioning rod when the motor is reset
	Lamp failure	lamp accidental defoaming
	Sensor failure	Temperature sensor signal is abnormal
	Fan failure	The main fan is not working properly.
Light Status	Display key status data of the current fixture for reference	
	Communication	0~100%, communication quality of the internal data link of the light
	Error count	The number of error frames detected after power-on, cumulative
	Light source temperature	Display the temperature of the current light source, "---" means no detection
	Display panel temperature	Display the temperature of the current display panel or the ambient temperature in the vicinity
	Sensor temperature	Displays the ambient temperature of the current motherboard temperature or motherboard installation location
Version information	Display the information and version of the current luminaire, an important reference for after-sales maintenance(C7.1.0)	
	device	The name of the light, the same as the device information of the RDM
	model	The model of light ,the same as the model information of RDM (3in1 bsw move head)
	Display board	Display board firmware version and serial number(PLH B1.0 1.0)
	main board 1	Main board 1 firmware version and serial number (C01B1.10V1.01)
Light time	Record the total accumulated time of the light source on, in minutes, the user manually removes it, as the time reference for regular maintenance of the light source	
Total time	Record the total accumulated time of the lamp on, in minutes, not clear	

Control panel of LED display information:

Blue	On	DMX signal ok
	Off	No DMX signal
Red	On	Error

Trouble Shooting:

Problem	Answer
The moving head light doesn't switch on.	Check the fuse the power socket Replace the lamp
Although shines, but the moving head lamp doesn't accept the instruction of the controller.	Check the digital start address and also check the connection situation of the communication control line
The moving head lamp only can work intermittently.	Inspect the power supply and voltage is whether normal. Make sure the fan is working well or fans and their filters not blocked
Defective projection	Make sure the lamp is within its life limit Remove dust or grease from the lenses.
The beam appears dim	heck the optics is clean or the lens in good condition(not cracked) Replace with a new lamp of the specified type and rating.

☆**Other maintain work should by the specialist which has the experience to carry on.**

Maintenance:

To prolong the life of the projector, some maintenance work has to be done to ensure the optical system in good condition. If the projector does not function, check the fuses on the power socket of the projector, they should only be replaced by fuses of the same specification. Should these be damaged, call a qualified technician before replacement. The projector has thermal protection device that will switch off the projector in case of overheating. Should either of these operate, check that the fans are not blocked, and if they are dirty, clean them before switching on the projector again. Check that the fans are operational, if not, call a qualified technician.

☆**Any maintenance work should only be carried out by qualified technicians.**

Keeping The Product Clean:

To ensure the reliability of the projector, it should be kept clean. It is recommended that the fans should be cleaned every 15 days. The lens and dichroic colour filters should also be regularly cleaned to maintain an optimum light output.

Do NOT use any type of solvent on dichroic colour filters.

Cleaning frequency depends on the environment in which the fixture operates: damp, smoke or particularly dirty surroundings can cause greater accumulation of dirt on the unit's optics. A soft cloth and typical glass cleaning products should be used for cleaning. It is recommended to clean the external optics at least once every 15 days and clean the internal optics at least once every 60 / 90 days.

☆**Do not use any organic solvent, e.g. alcohol, to clean housing of the apparatus.**

Equipment and Appendix:

☆ MOTOH 400 Moving Head Light 1pcs
☆ Power Cable 1pcs
☆ XLR connector 1unit
☆ Light Hook 2pcs
☆ The Product of Instruction 1pcs

Channel List:

Channel		Function	Value	Description
26CH	**22CH**			
CH1	CH1	PAN	0-255	0-540
CH2	CH2	PAN Fine	0-255	
CH3	CH3	TILT	0-255	0-270
CH4	CH4	TILT Fine	0-255	
CH5	*	XY speed	0-255	fast to slow
CH6	CH5	Dimmer	0-255	0-100% Dimmer
CH7	CH6	Strobe	0-3	Off
			4-103	Pulse strobe from slow to fast
			104-107	Open
			108-155	Open strobe from slow to fast
			156-207	Close strobe from slow to fast
			208-212	Open
			213-251	Random strobe
			252-255	Open
CH8	CH7	Color	0-9	White
			10-19	Color1- Red
			20-29	Color2- Green
			30-39	Color3- Blue
			40-49	Color4- Yellow
			50-59	Color5-rose red
			60-69	Color6- orange
			70-79	Color7- cyanine
			80-89	Color8- fluorescent
			90-99	White+Color 1
			100-109	Color 1+Color 2

			110-119	Color 2+Color 3
			120-129	Color 3+Color 4
			130-139	Color 4+Color 5
			140-149	Color 5+Color 6
			150-159	Color 6+Color 7
			160-169	Color 7+Color 8
			170-179	Color 9+Color 9
			180-215	Rainbow rotate reverse (fast to slow)
			216-220	Stop
			221-255	Rainbow rotate reverse (slow to fast)
CH9	CH8	C	0-255	0-100%
CH10	CH9	M	0-255	0-100%
CH11	CH10	Y	0-255	0-100%
CH12	CH11	CTO	0-10	No function
			11-255	0-100%
CH13	CH12	Static Gobo	0-4	White
			5-9	Gobo1
			10-14	Gobo 2
			15-19	Gobo 3
			20-24	Gobo 4
			25-29	Gobo 5
			30-34	Gobo 6
			35-39	Gobo 7
			40-44	Gobo 8
			45-49	Gobo 9
			50-54	Gobo 10
			55-59	Gobo 11
			60-64	Gobo 12
			65-69	Gobo 1 shaking slow to fast
			70-74	Gobo 2 shaking slow to fast
			75-79	Gobo 3 shaking slow to fast
			80-84	Gobo 4 shaking slow to fast
			85-89	Gobo 5 shaking slow to fast
			90-94	Gobo 6 shaking slow to fast
			95-99	Gobo 7 shaking slow to fast
			100-104	Gobo 8 shaking slow to fast
			105-109	Gobo 9 shaking slow to fast
			110-114	Gobo 10 shaking slow to fast
			115-119	Gobo 11 shaking slow to fast
			120-127	Gobo 12 shaking slow to fast
			128-190	Rotate reverse (fast to slow)
			191-192	Stop
			193-255	Rotate forward (slow to fast)

CH14	CH13	Rot Gobo	0-9	White
			10-19	Gobo1
			20-29	Gobo 2
			30-39	Gobo 3
			40-49	Gobo 4
			50-59	Gobo 5
			60-69	Gobo 6
			70-79	Gobo 7
			80-89	Gobo 1 shaking slow to fast
			90-99	Gobo 2 shaking slow to fast
			100-109	Gobo 3 shaking slow to fast
			110-119	Gobo 4 shaking slow to fast
			120-129	Gobo 5 shaking slow to fast
			130-139	Gobo 6 shaking slow to fast
			140-149	Gobo 7 shaking slow to fast
			150-200	Rotate forward (fast to slow)
			201-205	Stop
			206-255	Rotate reverse (slow to fast)
CH15	CH14	Gobo rot	0-127	0-400 degrees
			128-190	Rotate forward (fast to slow)
			191-192	Stop
			193-255	Rotate reverse (slow to fast)
CH16	*	Rot fine	0-255	Gobo Rot fine
CH17	CH15	Prism1	0-127	Close prism
			64-127	prism1 (6-face prism)
CH18	CH16	Prism1 Rot	0-127	0-400 degrees
			128-187	Rotate reverse (fast to slow)
			188-195	Stop
			196-255	Rotate forward (slow to fast)
CH19	CH17	Prism2	0-127	Close prism
			128-255	Prism2 (8-face prism)
CH20	CH18	Prism2 Rot	0-127	0-400 degrees
			128-187	Rotate reverse (fast to slow)
			188-195	Stop
			196-255	Rotate forward (slow to fast)
CH21	CH19	Frost	0-127	No function
			128-255	Frost
CH22	*	Reserved	0-255	No function
CH23	CH20	Zoom	0-255	Large to small
CH24	CH21	Focus	0-255	far to near
CH25	*	Focus fine	0-255	Focus fine
CH26	CH22	Reset	210-215	Reset XY(over 6 seconds)
			220-235	Reset effect motor(over 6 seconds)
			240-255	Reset all(over 6 seconds)

Gobo and color:

Color wheel

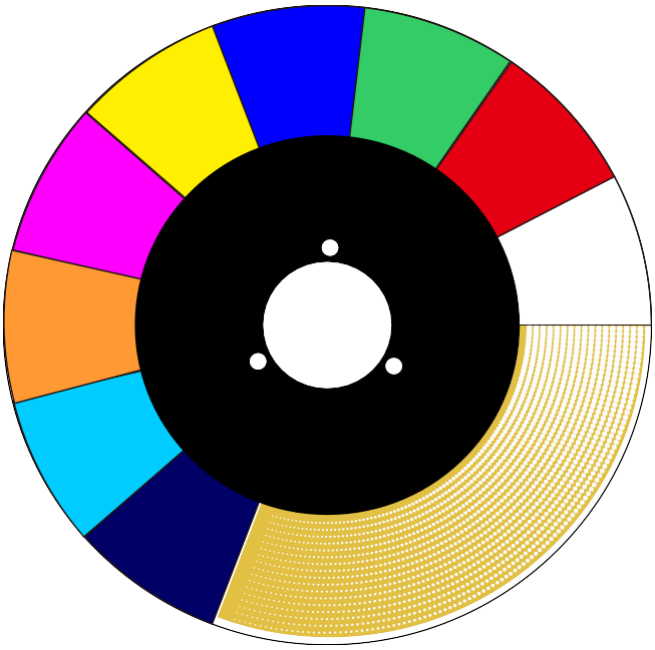

Fixed Gobo wheel

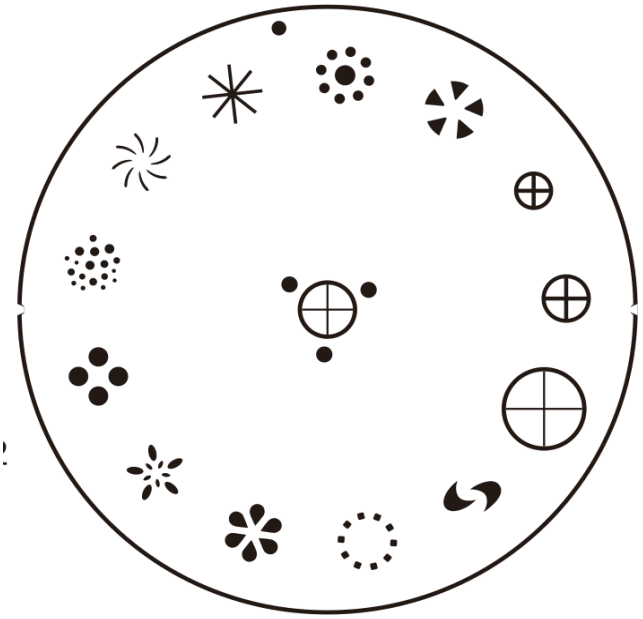

Rotation Gobos



CMY color

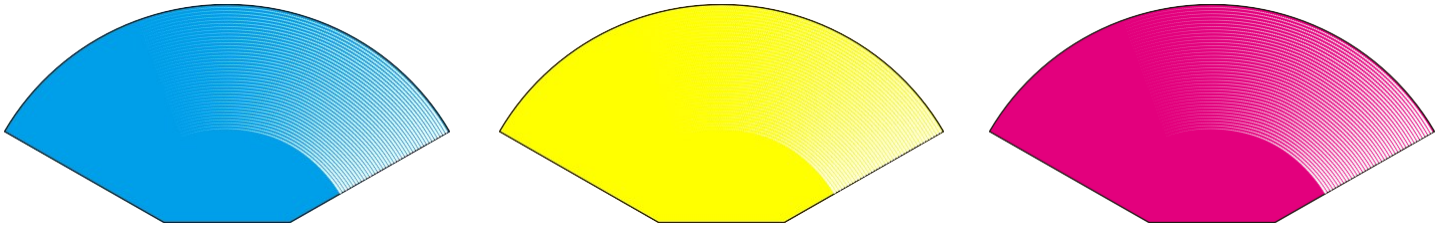

Product Drawing:

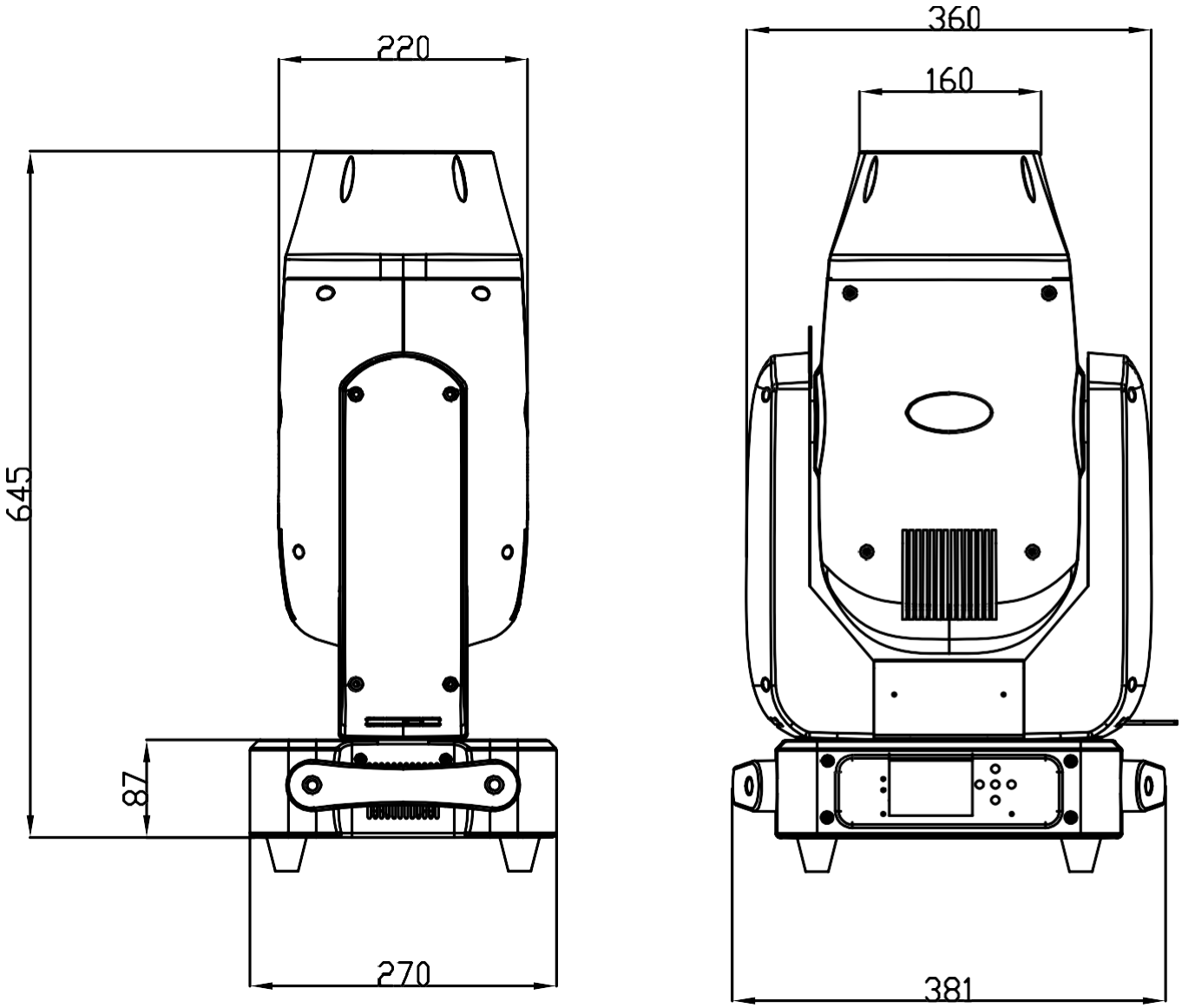

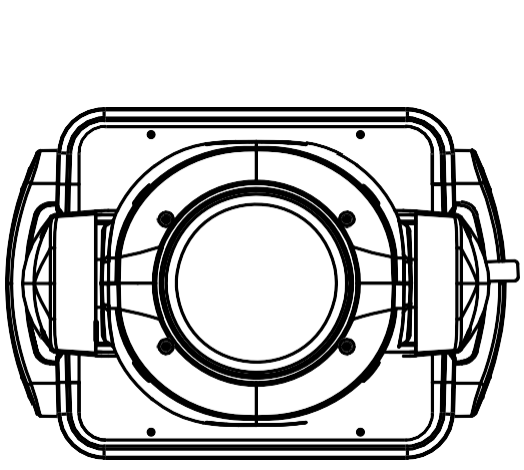

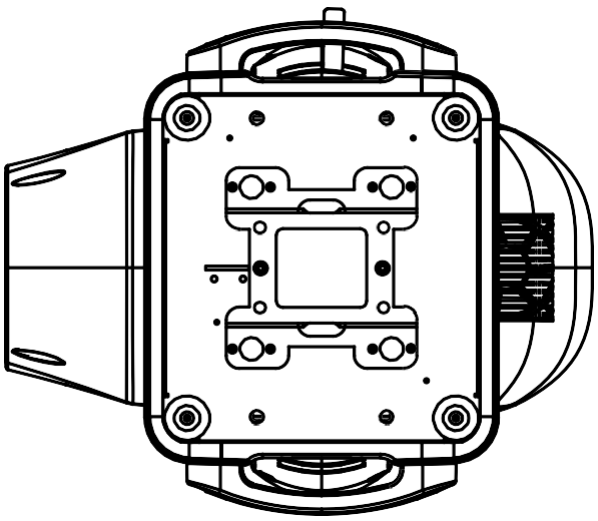

Technical Parameters:

Voltage: AC100V-240V; 50/60Hz

Power Consumption: 460W (220V)

LED Bulbs: 400W*1pcs white engine LED module

Color temperature: 8000-8500K

Color rendering index (CRI):> 70Ra

LED Lifetime: 30000Hours

Color: 8 colors + open color wheel

CMY + linear CTO color mixing system

Gobo: 12 Fixed Gobo + open Gobo wheel

7 Rotation Gobo + open Gobo wheel

Prism: 1pcs rotation 6-face linear prism, Bilateral rotation.

1pcs rotation 8-face round prism, Bilateral rotation.

Frost: 1Pcs frost mirror

Dimmer: 0-100% linear adjustment

Strobe: 0-25/second high speed strobe, but single color Mixes the color strobe

Focus: Electric focus from near to far

ZOOM: Linear Zoom function

Zoom angle: 4°-50°

Head Movement: Pan 540°, Tilt 270°, with auto position correction and electronic replacement function.

Control mode: DMX 512, RDM, Auto, Self-test mode, Sound, Master/slave

DMX Channel: 22/26CH

Control Panel: 2.8-inch LCD touch screen with 5 buttons, the menu can be set English and Chinese menu

IP Grade: IP20

Work Environment Temperature: 0°C~40°C

Net weight:23KG

Gross Weight:25kg

Product Size: 381x270x645mm

Package Size: 540 x 450x 610mm