ADERTECH

H2BT-U4H-100EUA

18Gbps HDMI over HDBaseT Extender with Bi-directional IR (100m)



User Manual

VER 2.1

Thank you for purchasing this product

We have done everything possible to ensure that our equipment pleases our consumers. When solving any problems in the operation and connection ADERTECH equipment, it is best to contact authorized companies and specialists who work with our equipment. Our equipment is intended for professional use, so you have professional skills in using such equipment. ADERTECH is a manufacturer of a wide range of multimedia solutions.

Surge protection device recommended

This product contains sensitive electrical components that may be damaged by electrical spikes, surges, electric shock, lighting strikes, etc. Use of surge protection systems is highly recommended in order to protect and extend the life of your equipment.

Table of Contents

1. Introduction.....1
2. Features.....1
3. Package Contents.....2
4. Specifications.....2
5. Operation Controls and Functions.....4
5.1 Transmitter Panel.....4
5.2 Receiver Panel.....5
5.3 Audio Signal Output Switching.....7
5.4 IR Pin Definition.....7
6. Application Example.....8

1. Introduction

This 18Gbps HDMI Extender can extend high definition video / audio signal, RS-232, bi-directional IR and internet signal, at the distance of up to 328ft / 100 meters between transmitter and receiver via a single CAT6a/7 cable and support resolution up to 4K2K@60Hz 4:4:4. The Transmitter supports ARC function and local audio extract. In addition, the extender is equipped with bi-directional IR pass-through which allows for source and display control. It also supports USB KVM and PoC function.

The extender offers the most convenient solution for HDMI extension via a single CAT cable with long distance capability, and is the perfect solution for any application.

2. Features

- ☆ HDCP 2.2 / HDCP 1.4 and DVI 1.0 compliant
- ☆ Support 18Gbps video bandwidth
- ☆ Video resolution is up to 4k2k@60Hz YUV 4:4:4
- ☆ The maximum transmission distance is 328ft / 100 meters via a single CAT6a/7 cable
- ☆ Support ARC (Audio Return Channel) function
- ☆ With bi-directional IR, RS-232 and CEC pass-through
- ☆ Support USB KVM function
- ☆ HDR, HDR10+, Dolby Vision and HLG function supported
- ☆ Support PoC (Power over Cable) function
- ☆ Compact design for easy and flexible installation

3. Package Contents

Qty	Item
1	18Gbps HDMI over HDBaseT Extender (Transmitter)
1	18Gbps HDMI over HDBaseT Extender (Receiver)
1	IR Blaster cable (1.5 meters)
1	20~60KHz IR Receiver cable (1.5 meters)
4	Mounting Ear
2	3-pin Phoenix connector
1	24V/1A Locking Power adapter
1	User Manual

4. Specifications

Technical	
HDCP Compliance	HDCP 2.2 / HDCP 1.4
Video Bandwidth	18Gbps
Video Resolution	4K2K 50/60Hz 4:4:4 4K2K 50/60Hz 4:2:2 4K2K 50/60Hz 4:2:0 4K2K 30Hz 4:4:4 1080p, 1080i, 720p, 720i, 480p, 480i All PC resolutions including 1920 x 1200
Color Space	RGB / YCbCr 4:4:4, YCbCr 4:2:2, YCbCr 4:2:0
Color Depth	8/10/12-bit (1080P60Hz, 4K30Hz, 4K60Hz YCbCr 4:2:2/4:2:0) 8-bit (4K60Hz 4:4:4)
HDMI Audio Formats	LPCM 2.0/2.1/5.1/6.1/7.1, Dolby Digital, Dolby TrueHD, Dolby Digital Plus(DD+), DTS-ES, DTS HD Master, DTS HD-HRA, DTS-X
L/R Audio Formats	PCM 2.0
SPDIF Audio Formats	LPCM2.0, Dolby Digital, Dolby Digital Plus, DTS
ESD Protection	Human body model — ±8kV (Air-gap discharge) & ±4kV (Contact discharge)

Connection	
Transmitter	Inputs: 1x HDMI Type A [19-pin female] Outputs: 1x HDBT OUT [RJ45, 8-pin female] 1x SPDIF OUT [S/PDIF] 1×L/R OUT [3.5mm Stereo Mini-jack] 1×LAN [RJ45] Control: 1x IR IN [3.5mm Stereo Mini-jack] 1x IR OUT [3.5mm Stereo Mini-jack] 1x RS-232 [Phoenix jack] 1x SERVICE [Mini-USB, Update port] 1×USB HOST [USB Type B]
Receiver	Inputs: 1x HDBT IN [RJ45, 8-pin female] 1x SPDIF IN [S/PDIF] Outputs: 1x HDMI Type A [19-pin female] 1x LAN [RJ45] Control: 1x IR IN [3.5mm Stereo Mini-jack] 1x IR OUT [3.5mm Stereo Mini-jack] 1x RS-232 [Phoenix jack] 1x SERVICE [Mini-USB, Update port] 2×USB 2.0 [USB Type A]
Mechanical	
Housing	Metal Enclosure
Color	Black
Dimensions	Transmitter / Receiver: 165mm [W] x 88mm [D] x 18mm [H]
Weight	Transmitter: 170g, Receiver: 165g
Power Supply	Input: AC 100 - 240V 50/60Hz Output: DC 24V/1A (Locking connector)
Power Consumption	13W
Operating Temperature	32 - 104°F / 0 - 40°C
Storage Temperature	-4 - 140°F / -20 - 60°C
Relative Humidity	20 - 90% RH (no condensation)
Resolution	**Distance**
4K2K	296ft /90M
1080P	328ft /100M

Resolution / Cable Length	4K60 - Feet / Meters	4K30 - Feet / Meters	1080P60 - Feet / Meters
HDMI IN / OUT	16ft / 5M	32ft / 10M	50ft / 15M
The use of “Premium High Speed HDMI” cable is highly recommended.			

5. Operation Controls and Functions

5.1 Transmitter Panel

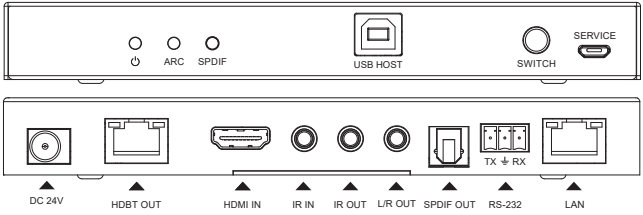

Name	Function Description
Power LED	Red LED is on when the Transmitter is working. LED is off when the Transmitter is on standby.
ARC LED	Green LED is on when ARC function is turned on.
SPIDIF LED	Green LED is on when SPDIF OUT port outputs the audio signal returned from SPDIF IN on the Receiver.
USB HOST	Connect to PC for transmitting Receiver’s USB data to Transmitter.
SWITCH	Press the button to switch the output audio signal source for SPDIF OUT and L/R OUT port.
SERVICE port	Firmware update port.
DC 24V	DC 24V input for 24V 1A power adapter. *Note that the extender supports PoC function, it means that either transmitter or receiver is connected to 24V/1A power supply, the other doesn’t need power supply.*
HDBT OUT	RJ45 connector for connecting the HDBT IN port of Receiver with CAT 5e/6 cable.

Connection Signal Indicator lamp *(on the left side of the HDBT OUT port)*	▪ Illuminate: Transmitter and Receiver are in good connection status. ▪ Flash: Transmitter and Receiver are in poor connection status. ▪ Dark: Transmitter and Receiver are not connected.
Data Signal Indicator lamp *(on the right side of the HDBT OUT port)*	▪ Illuminate: HDMI signal with HDCP. ▪ Flash: HDMI signal without HDCP. ▪ Dark: No HDMI signal.
HDMI IN	HDMI source input.
IR IN	IR input port for receiving the signal of IR remote.
IR OUT	IR output port for control of source device. This IR output signal is from IR IN port of the Receiver.
L/R OUT	3.5mm stereo connector for analog audio output.
SPDIF OUT	SPDIF connector for optical audio output.
RS-232	3-pin Phoenix connector for RS232 command transmission, supporting RS-232 command pass-through between the Transmitter and Receiver.
LAN	RJ45 connector for connecting Hub or router.

5.2 Receiver Panel

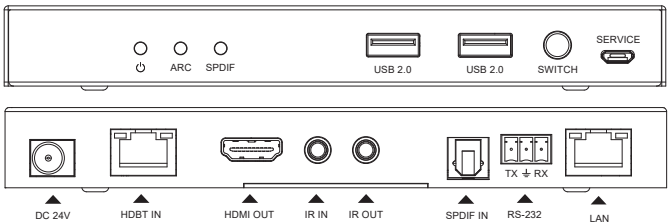

Name	Function Description
Power LED	Red LED is on when the Receiver is working. LED is off when the Receiver is on standby.
ARC LED	Green LED is on when ARC function is turned on.

SPIDIF LED	Green LED is on when SPDIF OUT port outputs the the audio signal returned from SPDIF IN on the Receiver.
Two USB 2.0 ports	Connect to USB device.
SWITCH	Press the button to switch the output audio signal source for SPDIF OUT and L/R OUT port.
SERVICE port	Firmware update port.
DC 24V	DC 24V input for 24V 1A power adapter. *Note that the extender supports PoC function, it means that either transmitter or receiver is connected to 24V/1A power supply, the other doesn't need power supply.*
HDBT IN	RJ45 connector for connecting the HDBT OUT port of the Transmitter with CAT 5e/6 cable.
Connection Signal Indicator lamp *(on the left side of the HDBT IN port)*	▪ Illuminate: Transmitter and Receiver are in good connection status. ▪ Flash: Transmitter and Receiver are in poor connection status. ▪ Dark: Transmitter and Receiver are not connected.
Data Signal Indicator lamp *(on the right side of the HDBT IN port)*	▪ Illuminate: HDMI signal with HDCP. ▪ Flash: HDMI signal without HDCP. ▪ Dark: No HDMI signal.
HDMI OUT	HDMI output for display.
IR IN	IR input port for receiving the signal of IR remote.
IR OUT	IR output port for control of display device. This IR output signal is from IR IN port of the Transmitter.
SPDIF IN	SPDIF connector for optical audio input.
RS-232	3-pin Phoenix connector for RS232 command transmission, supporting RS-232 command pass-through between the Transmitter and Receiver.
LAN	Connect to Internet device such as PC or laptop.

5.3 Audio Signal Output Switching

Switch the output audio signal source for SPDIF OUT and L/R OUT port via the “SWITCH” button on the panel (the corresponding LED will illuminate). The states of ARC LED and SPDIF LED indicate the audio output logic, as shown in the table below:

ARC LED State	SPDIF LED State	Audio Output Logic
On	Off	The SPDIF OUT, L/R OUT and HDMI IN ports of the Transmitter simultaneously output the audio signal returned from HDMI (display device) on Receiver.
On	On	The SPDIF OUT and L/R OUT ports output the audio signal returned from HDMI (display device) on Receiver.
Off	On	The SPDIF OUT and L/R OUT ports output the audio signal returned from SPDIF IN on Receiver.
Off	Off	The SPDIF OUT and L/R OUT ports output the audio signal extracted from the Transmitter.

5.4 IR Pin Definition

IR Receiver and Blaster pin’s definition as below:

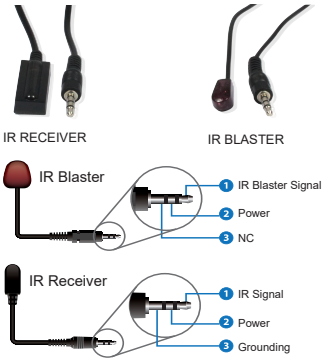

Note: When the angle between the IR receiver and the remote control is ± 45 °, the transmission distance is 0-5 meters; when the angle between the IR receiver and the remote control is ± 90 °, the transmission distance is 0-8 meters.

6. Application Example

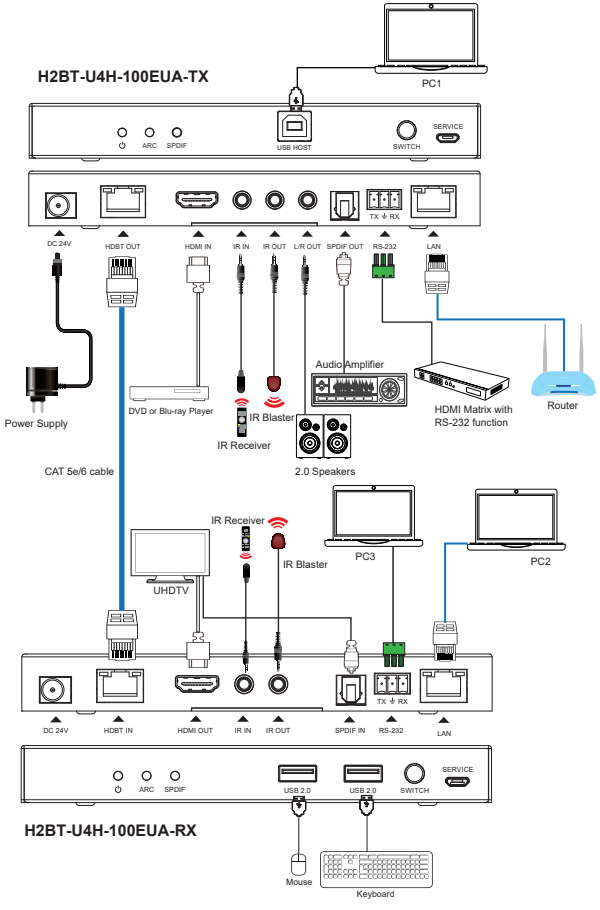

© 2023 ADERTECH Co Ltd. The ADERTECH logo and associated visual identity are trademarks or registered trademarks of ADERTECH and/or its affiliates