ALUME-T-WB

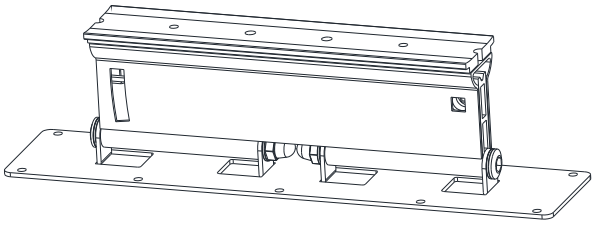

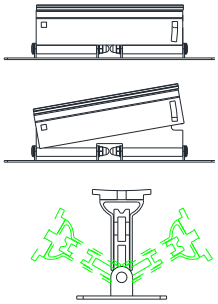

- 3 "or 4" sound post wall hangers
- Adjustable use
- Able to tilt 15 degree forward
- 180 degree angle djustable

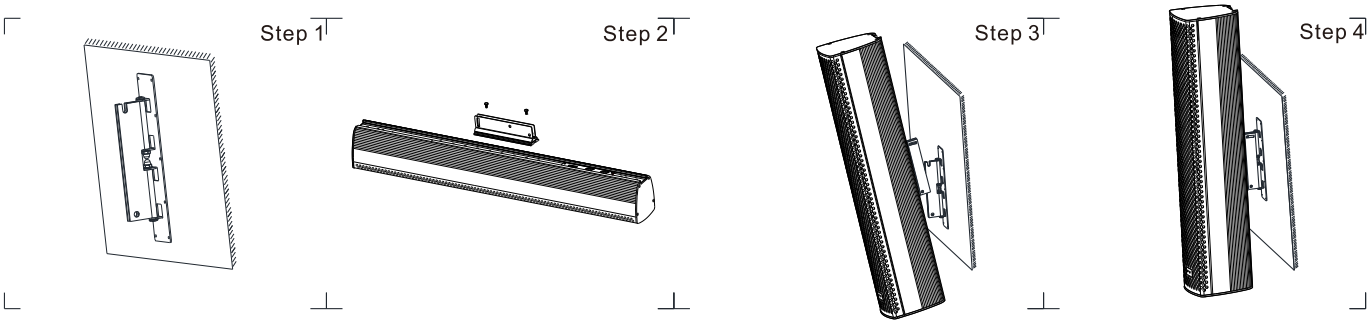

ALUME-D-WB

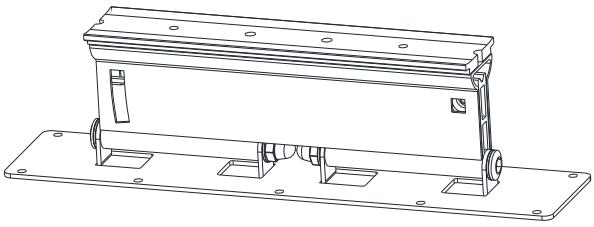

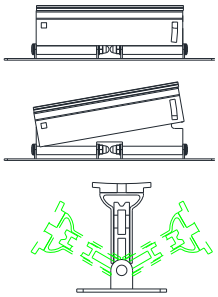

- 2 inch sound post wall hanger
- Adjustable use
- Able to tilt 15 degree forward
- 180 degree angle djustable

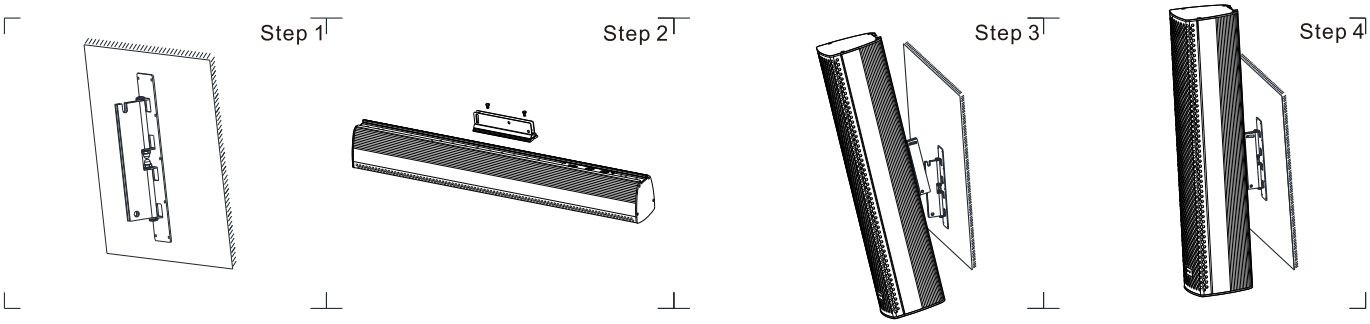

ALUME-T-CSFA-75/150

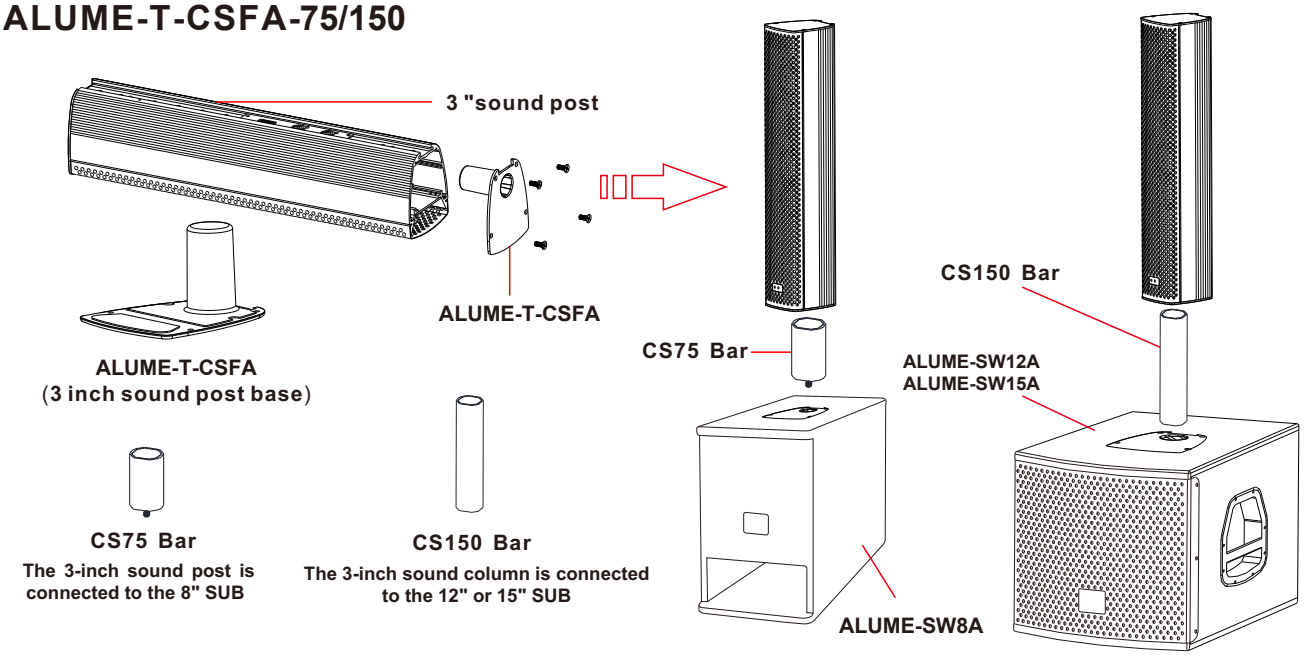

ALUME-CP



ALUME-CP

Two 3 - or 4-inch connectors for sound posts

Installation instructions:

Fix it on the two sound posts with four M6 screws, then install it on the wall, fix it with M6 screws, and fix the safety rope to the wall, as shown in Setp 1 Step 2.

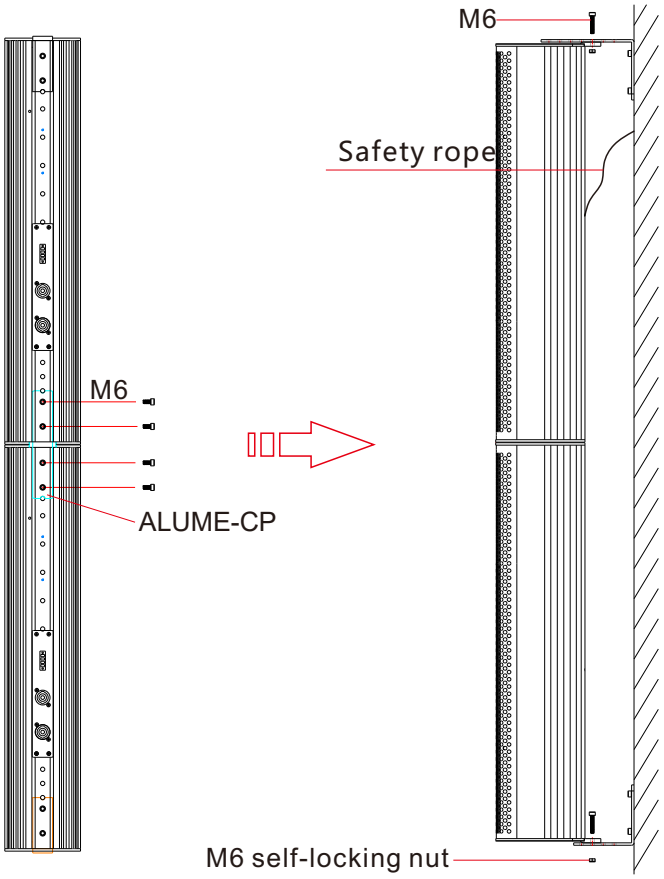

Step 1 Step 2

ALUME-PM

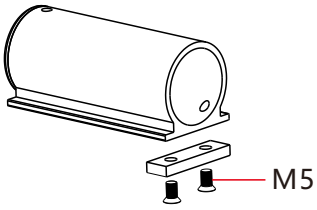

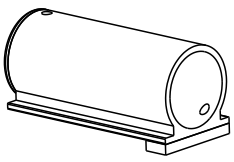

ALUME-PM

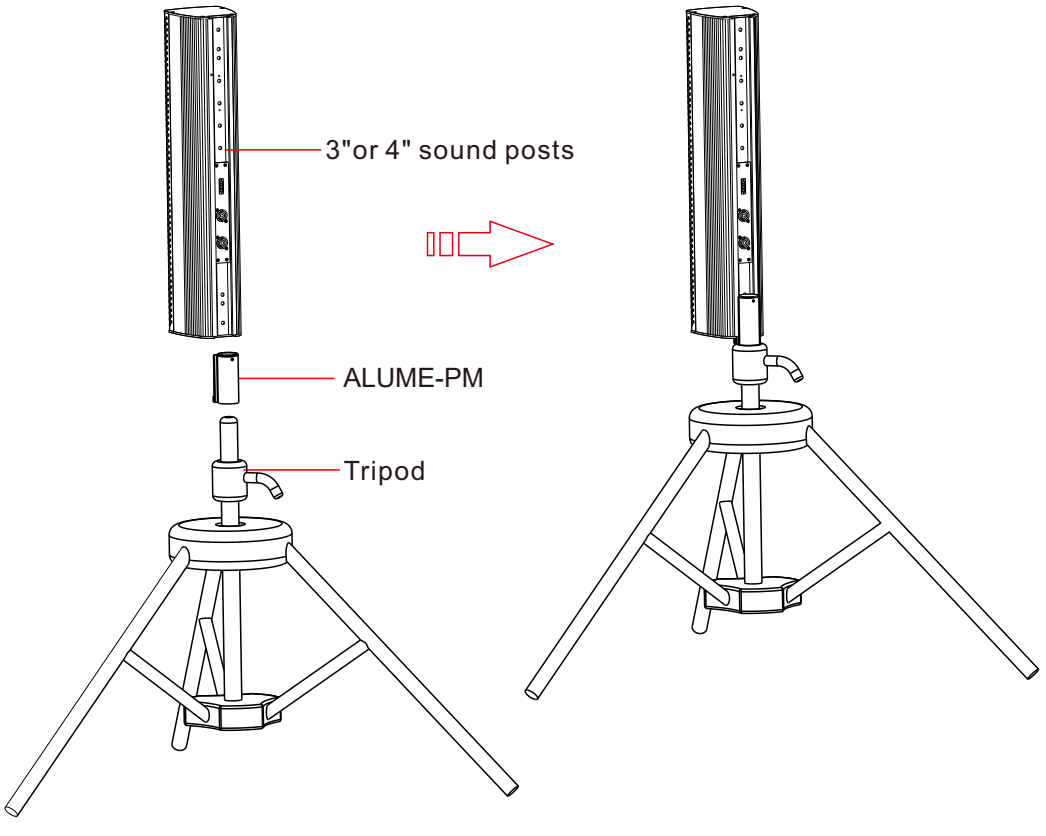

Step 1 Step 2