ADERTECH

User Manual



PAMP-41300

PROFESSIONAL AUDIO POWER AMPLIFIER

ANNOUNCEMENT

CAUTION

Installation

- Users can only connect this apparatus into the AC power socket which is indicated in this operation manual or shown on the specifications of the adapter. Otherwise it may cause fire or electric shock.
- DO NOT put this apparatus into water or expose them to moisture. Otherwise it may cause fire or electric shock.
- DO NOT put the container filled with liquid or small metallic items on this apparatus. Otherwise the spilled liquid or fallen of small metallic items into this apparatus may cause fire or electric shock.
- DO NOT put heavy weight (including this apparatus) on the power cord. Otherwise it may cause the damage of the power cord and lead to fire or electric shock. Specially noted that DO NOT put a heavy weight on the power cord covered by a carpet.

Operation

- DO NOT scratch, bend, twist, stretch or heat the power cord. Otherwise it may cause damage of power cord and even cause fire or electric shock.
- DO NOT open the cover of this apparatus. Otherwise it may cause electric shock. If you need inner overhaul, maintenance or repair, please contact the local distributor.
- Do not revamp the apparatus arbitrarily. Otherwise it may cause fire or electric shock.
- If there is a lighting and thunder strike, turn off the power of this apparatus as soon as possible and pull out the power cable's socket from the convenience receptacle.
- If there is a possibility of lighting, do not touch the power cable's plug when it is connected. Otherwise it may cause electric shock.

When exceptions occur during the process of operation:

- If the power cord is damaged (such as being cut or core wire is exposed), contact the local distributor and require for a new one. Keep using the damaged power cord may cause fire or electric shock.
- If this apparatus falls from height or the box is broken, turn off the power amplifier as soon as possible, and then pull out the plug from AC convenience receptacle. Contact the local distributor for maintenance. Failing to comply with this item and keeping using the broken apparatus may cause fire or electric shock.
- When finding out any problem, such as smoking, peculiar smell, noise, enter of foreign materials or liquid into the apparatus, turn off the power amplifier as soon as possible and pull out the power plug from the AC receptacle. Contact the local distributor for maintenance. Keep using this apparatus may cause fire or electric shock.

ATTENTION

- Avoid using this apparatus in the following situations:
  —exposed in the environment of splashing oil or steam, for example, near to the kitchen stove or humidifier, etc.
  —on the unstable surface, such as the shaky table top or oblique surface
  —exposed under the overheated environment, such as the inner space of a car with closed windows or the place under direct sunlight
  —exposed under the extreme moist or place with accumulated dust
- DO NOT place the power cable near the heat. Otherwise it may lead to melt or even fire.
- Grasp the head of plug when pulling out the power plug from AC receptacle. DO NOT drag the cable directly. Otherwise it may cause damage of the power cord and even fire or electric shock.
- DO NOT touch the power plug with wet hands. Otherwise it may cause electric shock.
- There are ventilation holes on the front and back of the amplifier in order to avoid the overheat inside. Do not block any ventilation holes. Otherwise it may cause fire. Pay a special attention to the followings:
  --DO NOT side lay or upend this apparatus.
  --DO NOT put this apparatus in the places of insufficient heat dissipation space, such as bookcase or closet(or wall mounted brackets)
  --DO NOT cover this apparatus with a tablecloth or put it on the carpet or bed.
  --Leave enough space around this apparatus so as to guarantee the normal heat dissipation. The heat dissipation space should be at least 10cm for two sides and the above.
  --If there is insufficient airflow, the inner temperature will warm up, which may lead to amplifier's faulty and even fire.
  --If users intent to move this apparatus, firstly unplug the power plug from the AC receptacle and then pull out all the connected cables. Otherwise it may cause damage of the cables and even fire or electric shock.
- Specialized cable can only be used when connecting the speaker with power amplifier. Otherwise it may cause fire.
- Before connecting this apparatus, turn off all the audio apparatus and speakers. Use the suitable cable and conduct the connection in accordance with the instructions.
- Before the power amplifier is turned on, do remember to turn the volume controller on the panel to the minimum first. Otherwise the burst of sound may cause hearing impairment.
- If this power amplifier is not used for a long-time, do remember to pull out the power plug from the AC receptacle. Otherwise it may cause fire.

Put all the accessories of this power amplifier (such as the machine legs, instruction manual and plastic bag) to the places where children can not reach.

WELCOME

The latest developed Class D amplifier, the promising D Series has the characteristics of light weight, low heat, high efficiency, exquisite and crystal clear treble, full mid frequency and flexible bass. Four layers circuitry design is of independent R&D and reaches the leading level in the world.

FEATURES

- Advanced Class D topology design, and 4 layer PCB of high standard give a compact and clean layout;
- High efficiency, less power consumption and lower heat emission, smaller size and light weight;
- SMPS is of independent R&D, which supplies sufficient and continuous power;
- Clean and clear sound, exquisite treble, punchy and flexible bass;
- Neutrik input and output sockets deliver better sonic performance;
- Selective input sensitivity: 23dB, 26dB, 29dB, 32dB, 35dB, 38dB, 41dB, 44dB;
- Complete protections against Overload, Overheat, Short Circuit, DC and limiter, switch
- on/off anti-shocking;
- Widely apply to various sound reinforcement venues.

Functions of The Front Panel and Rear Panel

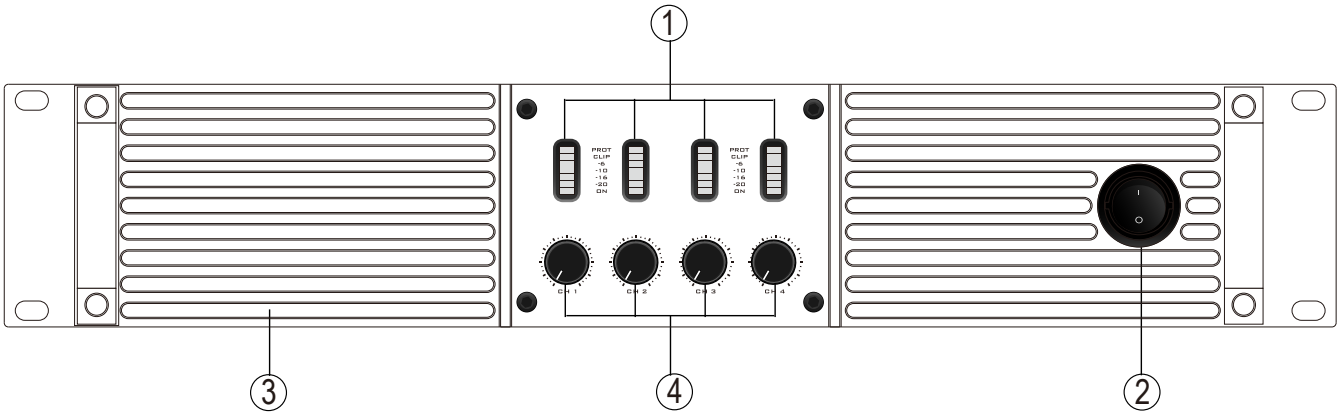

①LED indicator lights: ON, -15,-12,-9,-6,-3, CLIP, FAULT
②Power switch
③Ventilation holes
④Volume controllers of Ch1,CH2,CH3,CH4

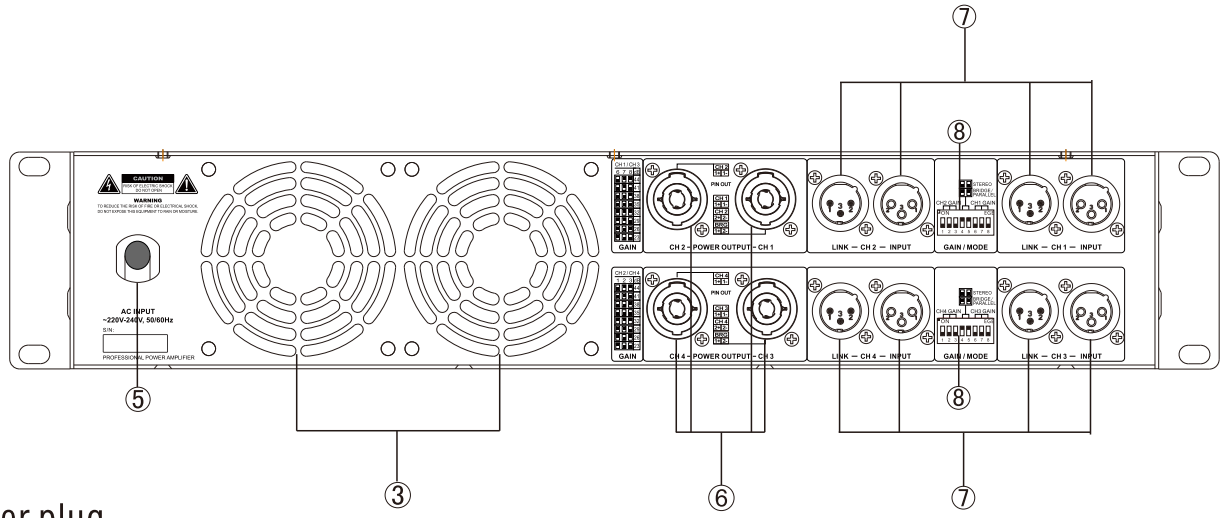

⑤ Power plug
⑥ Output sockets: Speakon
⑦ Input sockets: Male&Female XLR
⑧ DIP Switch for choosing input sensitivity and operation mode

SETUP

1.Unpack and install the amplifier.Please unpack and inspect your amplifier for any damage that may have occurred during transit. If damage is found, notify the transportation company immediately. Only you can initiate a claim for shipping damage. We will be happy to help as needed. Save the shipping carton as evidence of damage for the shipper's inspection. We also recommend that you save all packing materials so you will have them if you ever need to transport the unit. Never ship the unit without the factory package!

WARNING: Before you start to set up your amplifier, make sure you read and observe the Important Safety Instructions found at the beginning of this manual.

2.Wire Inputs and Outputs

2.1 Stereo Mode Wiring

IMPORTANT: Before wiring, rotate the sound control knob to the minimum, turn off the amplifier and unplug its power cord.

Choose the STEREO mode on the rear panel by setting the DIP switch. 

Choose the input sensitivity on the rear panel by setting the DIP.
Connect the inputs and outputs as Figure 1.Pay attention to the polarity of the connection between the speaker and amplifier. Sound volume is controlled by sound volume control knobs of each channel on the front panel respectively.

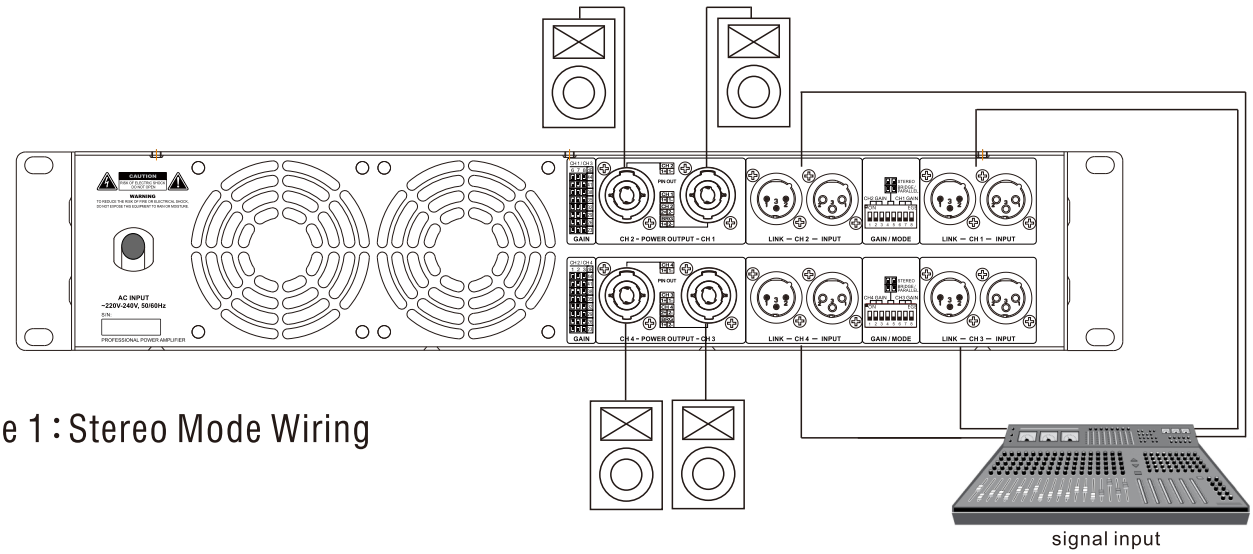

Figure 1：Stereo Mode Wiring

2.2 Bridge Mode Wiring

IMPORTANT: Before wiring, rotate the sound control knob to the minimum, turn off the amplifier and unplug its power cord.

Choose the BRIDGE mode on the rear panel by setting the DIP switch. 

Choose the input sensitivity on the rear panel by setting the DIP.
Connect the inputs and outputs as Figure 2.Pay attention to the polarity of the connection between the speaker and amplifier. Sound volume is controlled by sound volume knob of Output Ch1 and Ch3 on the front panel.

IMPORTANT: Pay attention to the connection on Speakon (BRD 1+ 2-).

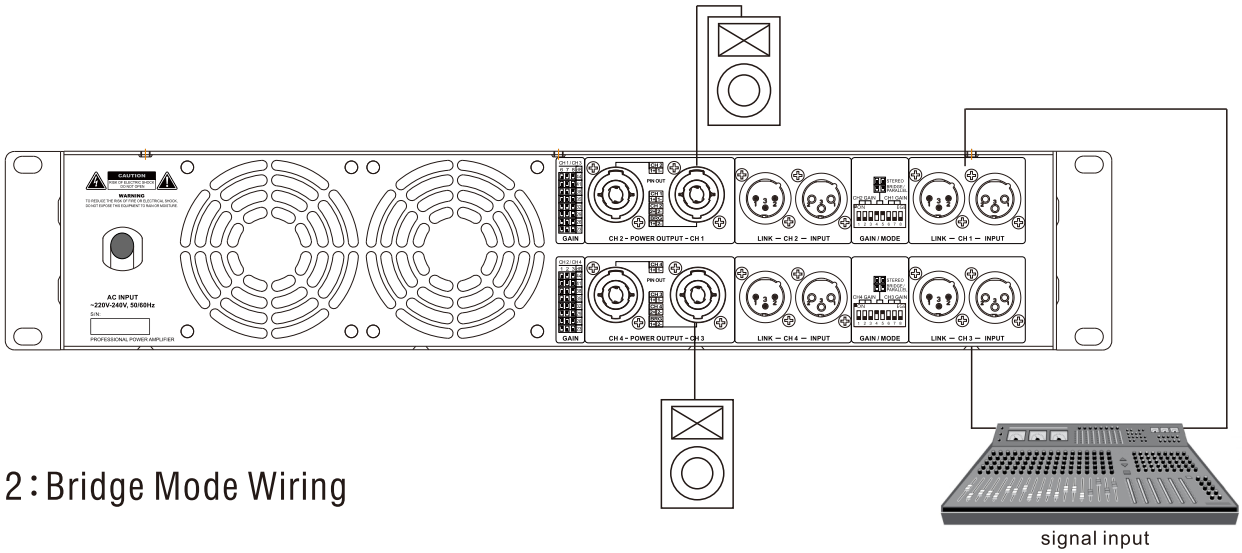

Figure 2：Bridge Mode Wiring

2.3 Parallel Mode Wiring

IMPORTANT: Before wiring, rotate the sound control knob to the minimum, turn off the amplifier and unplug its power cord.



Choose the Parallel mode on the rear panel by setting the DIP switch.
Choose the input sensitivity on the rear panel by setting the DIP.
Connect the inputs and outputs as Figure 3.Pay attention to the polarity of the connection between the speaker and amplifier. Sound volume of Output Ch1 and Ch2 is controlled by sound volume control knobs of each channel on the front panel respectively.

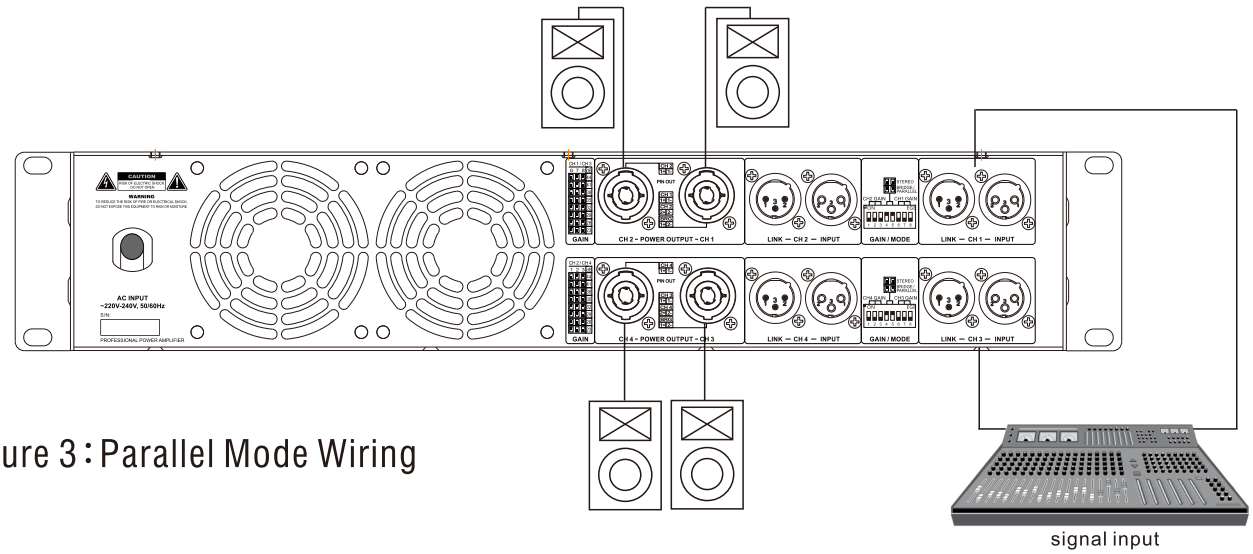

Figure 3：Parallel Mode Wiring



There are yellow CLIP LED lights for each channels which indicates clipping. If CLIP light flickers, it indicates the signal has been clipped. When the power amplifier works normally, it is a formal phenomenon that the CLIP light flickers discontinuously. If the CLIP light flickers continuously for a long time, users should reduce the volume by turning the volume control knobs on the front panel.

Specifications

MODEL	PAMP-41300
Rated Power(8Ω)	4x1300W
Rated Power(4Ω)	4x2350W
Rated Power(2Ω)	4x2800W
Rated Power(Bridge 8Ω)	2x4680W
Rated Power(Bridge 4Ω)	2x5600W
Frequency Response	15Hz-30kHz(±1dB)
Damping Factor	> 240(1kHz,8Ω)
Slew Rate	28V/μs
Input Sensitivity	0.775V/1.0V/1.2V/1.4V
THD+N	< 0.1%
SNR	100dB
Input Socket	Male & Female XLR
Output Socket	Speakon
Input Impedance	20kΩ Balance, 10kΩ Unbalance
Power Supply	AC~200-240V/50-60Hz
Voltage Range	AC~180-264V/50-60Hz
Product Dimensions	(WxHxD)483mmx88mmx390mm
Packing Size	(WxHxD)570mmx148mmx460mm
Net/Gross Weight	12.5KG/14KG
Protection	amplitude limiting, start up/shut down anti-shocking, DC protection, output short circuit and thermal protection

Declaration: We reserve the right to change the design of any product from time to time without notice and with no obligation to make corresponding changes in products previously manufactured.

All trademarks are the property of their respective owners. ADERTECH is not responsible for any errors that may appear in this document.publication. Product, pricing and feature information contained herein is subject to change without notice.

© 2023 ADERTECH Co Ltd. The ADERTECH logo and associated visual identity are trademarks or registered trademarks of ADERTECH and/or its affiliates