adertech

# CMP-UI2ATC

## Integrated UHD Tracking Camera

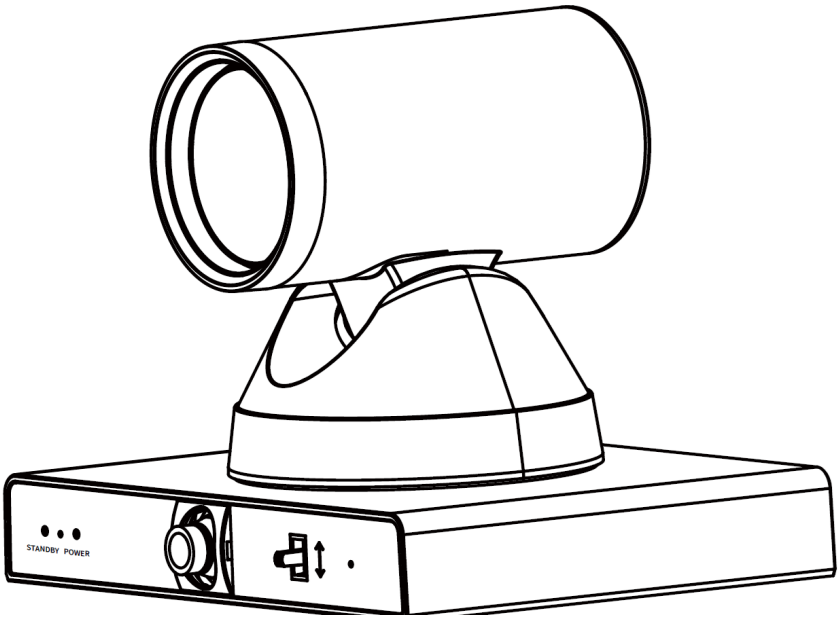


User Manual
(V2.0)

## Copyright

All contents of this manual, whose copyright belongs to our corporation, cannot be cloned, copied or translated without the permission of our corporation.

## Notice

Product specifications and information which were referred to in this document are for reference only. We may change, delete, or update any content at any time and without prior notice.

## FCC NOTICE (Class A)

This product complies with Part 15 of the FCC Rules. The operation is subject to the following two conditions: (1) this device may not cause harmful interference, and (2) this device must accept any interference received, including interference that may cause undesired operation.

**Note**

This product has been tested and found to comply with the limits for a Class A digital device, pursuant to Part 15 of the FCC Rules. These limits are designed to provide reasonable protection against harmful interference in a residential installation. This equipment generates uses and can radiate radio frequency energy and, if not installed and used in accordance with the instructions, may cause harmful interference to radio communications. However, there is no guarantee that interference will not occur in a particular installation. If this equipment does cause harmful interference to radio or television reception, which can be determined by turning the equipment off and on, the user is encouraged to try to correct the interference by one or more of the following measures:

- Reorient or relocate the receiving antenna.
- Increase the separation between the equipment and receiver.
- Connect the equipment into an outlet on a circuit different from that to which the receiver is connected.
- Consult the dealer or an experienced radio/television technician for help.

## Class A ITE

Class A ITE is a category of all other ITE which satisfies the class A ITE limits but not the class B ITE limits. Such equipment should not be restricted in its sale but the following warning shall be included in the instructions for use:

**Warning**

Operating this equipment in a residential environment may cause radio interference.

## European Community Compliance Statement (Class A)

This product is herewith confirmed to comply with the requirements set out in the Council Directives on the Approximation of the laws of the Member States relating to Electromagnetic Compatibility Directive 2014/30/EU.

# Catalogue

**1** Safety Precautions....1
**2** Packing List....1
**3** Quick Start....1
**4** About Product....2
4.1 Features....2
4.2 Specifications....2
4.3 Interface and Switch....4
4.4 Dimension....4
4.5 Installation....5
4.6 Remote Control....6
**5** GUI Settings....7
5.1 FEATURE MENU....7
5.2 FEATURE EXPOSURE....7
5.3 FEATURE COLOR....7
5.4 FEATURE IMAGE....8
5.5 FEATURE P/T/Z....8
5.6 FEATURE NOISE REDUCTION....8
5.7 FEATURE SETUP....8
5.8 FEATURE COMMUNICATION SETUP....9
5.9 FEATURE RESTORE DEFAULT....9
**6** WEB Settings....9
6.1 Access Camera....9
6.2 Control Camera....9
6.3 Video Settings....10
6.4 Image Settings....11
6.5 Audio Settings....11
6.6 System Settings....12
6.7 Network Settings....12
6.8 Device Information....13
6.9 Download the Upgrade Program....13
**7** Troubleshooting....13

# 1 Safety Precautions

- During the installation and operation, all electrical safety regulations of the country and region of use must be strictly observed.
- Please use the power adapter that comes standard with this product.
- Do not connect multiple devices to the same power adapter (exceeding capacity of the adapter may generate excessive heat or cause fire).
- Do not rotate the camera by hand, otherwise it may cause mechanical failure.
- When installing this product on a wall or ceiling, make sure the device securely and there are no obstacles within the rotation range; Do not power on until all installations are completed.
- To avoid heat build-up, please keep smooth ventilation around the device.
- If the device smokes, smells, or makes noises, please turn off the power and unplug the power cord immediately, then contact the dealer in time.
- This device is not waterproof, please keep the device dry.
- This product has no user serviceable parts, damage caused by disassembly by the user is not covered by the warranty.

**Notice**

Electromagnetic field at specific frequencies may affect the image quality.

# 2 Packing List

| Name | Quantity |
|---|---|
| Camera | 1 |
| Power Adapter | 1 |
| Remote Control | 1 |
| RS232 Cable | 1 |
| Mounting Bracket (with screws) | 1 |
| User Manual | 1 |

# 3 Quick Start

1) Please check connections are correct before starting.

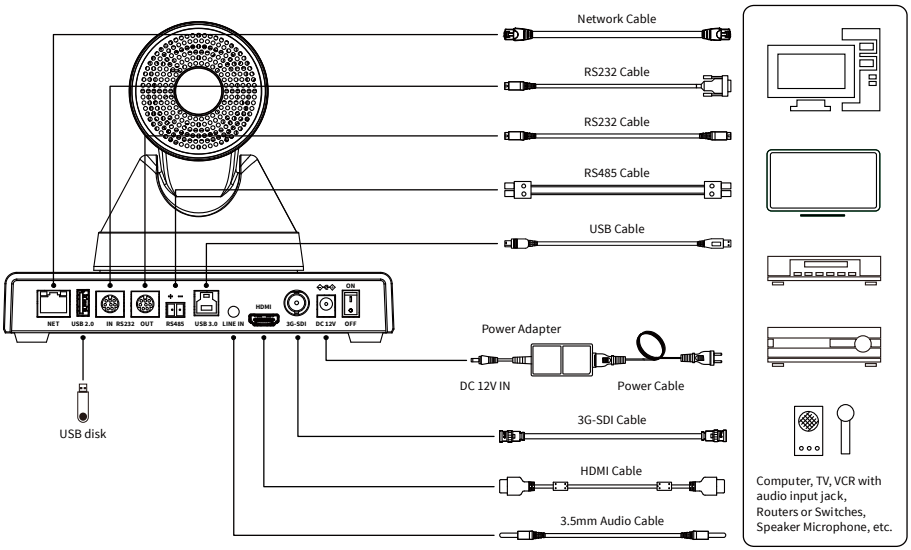

2) Connect the supplied adapter to the power connector and then switch the ON/OFF button to ON position. The power indicator on the front panel of the camera turns on.
3) After the camera is powered on, it starts to initialize, right up to the limit position, and then both horizontal and vertical go to the middle position. When the motor stops running, it indicates the initialization is completed.

# 4 About Product

## 4.1 Features

- **Integrated Design**

Integrated design, it can output panoramic and feature HD video at the same time.

- **Intelligent Teaching Tracking**

Built-in leading image recognition and tracking algorithm, you can achieve smooth and natural tracking without any auxiliary positioning camera or tracking host. Different cameras can be installed to achieve teacher tracking or student tracking.

- **Adjustable Viewing Angle**

The panoramic lens angle can be adjusted up and down (-15°~+15°), which is very convenient for engineering installation and debugging.

- **71° Wide-angle Lens+12x Optical Zoom**

High quality 4K wide angle lens with 8 million ultra-high resolution, 12x optical zoom, and horizontal field angle of view up to 71°.

- **4K UHD**

Using 1/2.5-inch high-quality UHD CMOS sensor with effective 8.51 million pixels, it can achieve high-quality images with a maximum resolution of 4K (3840x2160). It is compatible with 1080P, 720P and other resolutions.

- **Multiple Interfaces**

Support HDMI and 3G-SDI interface, effective transmission distance of 3G-SDI is up to 150 meters (1080P30). HDMI, NET or 3G-SDI, NET can output two HD digital signals at the same time.

- **Built-in G-sensor (Optional)**

Support automatic image flip function, convenient for engineering installation.

- **Built-in Microphone**

Built in microphone array, omnidirectional pickup, pickup distance up to 6 meters, unique noise suppression algorithm, perfect voice presentation.

## 4.2 Specifications

| **Feature Camera** | |
|---|---|
| Signal System | HDMI: 4K@30fps, 4K@25fps, 4K@29.97fps, 1080P@30fps, 1080P@25fps<br>SDI: 1080P@30fps, 1080P@25fps |
| Sensor | 1/2.5'', CMOS,<br>Effective Pixel: 8.51M |
| Scanning Mode | Progressive |
| Lens | 12x, f = 4.4mm~52.8mm,<br>F1.8~F2.6 |
| Digital Zoom | 16x |
| Minimal Illumination | 0.5 Lux @ (F1.8, AGC ON) |
| Shutter | 1/30s~1/10000s |
| White Balance | Auto, Indoor, Outdoor,<br>One Push, Manual, VAR |
| Backlight Compensation | Support |
| Digital Noise Reduction | 3D Digital Noise Reduction |
| SNR | ⩾55dB |
| Horizontal FOV | 71°~8.2° |
| Vertical FOV | 42.7°~4.5° |
| Pan Angle | ±170° |
| Tilt Angle | ±30° |
| Pan Speed | 1.61°~75.56°/s |
| Tilt Speed | 0.44°~15°/s |
| Image Flip | Support |
| Image Freeze | Support |

| | |
|---|---|
| Preset Position | 255 |
| Preset Accuracy | 0.1° |
| **Panorama Camera** | |
| Signal System | HDMI: 4K@30fps, 4K@25fps, 4K@29.97fps, 1080P@30fps, 1080P@25fps<br>SDI: 1080P@30fps, 1080P@25fps |
| Sensor | 1/2.5'', CMOS,<br>Effective Pixel: 8.51M |
| Scanning Mode | Progressive |
| Lens Mount | M12 |
| Lens I (CMP-U12ATT) | f = 8mm, Horizontal FOV 48° |
| Lens II (CMP-U12ATC) | f = 1.97mm, Horizontal FOV 107° |
| Minimal Illumination | 0.5 Lux @ (F1.8, AGC ON) |
| Shutter | 1/30s~1/10000s |
| White Balance | Auto, Indoor, Outdoor,<br>One Push, Manual, VAR |
| Digital Noise Reduction | 3D Digital Noise Reduction |
| Backlight Compensation | Support |
| Image Freeze | Support |
| Image Flip | Support |
| **USB Features** | |
| Operate System | Windows 7/8/10, Mac OS X, Linux, Android |
| Color System / Compression | YUY2/H.264/MJPEG |
| Video Format | ● YUY2:<br>max to 1080P@30fps<br>● H.264 AVC:<br>max to 2160P@30fps<br>● H.264 SVC:<br>max to 2160P@30fps<br>● MJPEG:<br>max to 2160P@30fps |
| USB Audio | Support |
| USB Video Communication Protocol | UVC 1.1~UVC 1.5 |
| UVC PTZ Control | Support |

| | |
|---|---|
| **Network Features** | |
| Video Compression | H.264/H.265/MJPEG |
| Video Stream | First/Second/Third/Fourth Stream |
| First/Second Stream Resolution | 3840x2160, 1920x1080, 1280x720, 1024x576, 720x480, 720x408, 640x480, 640x360 |
| Third/Fourth Stream Resolution | 720x480, 720x408, 640x360, 480x320, 320x240 |
| Video Bit Rate | 32kbps~51200kbps |
| Bit Rate Control | CBR, VBR |
| Frame Rate | 1fps~30fps |
| Audio Compression | AAC |
| Audio Bit Rate | 48K, 64K, 96K, 128K |
| Protocols | TCP/IP, HTTP, RTSP, RTMP(S), ONVIF, DHCP, Multicast, etc. |
| **Interfaces** | |
| Network Interface | 1 x NET: 10M/100M/1000M Adaptive Ethernet Port, support PoE+ |
| USB 2.0 Interface | 1 x USB 2.0: Type A |
| Communication Interface | 1 x RS232 IN: 8pin Min DIN, Max Distance: 30m, Protocol: VISCA/Pelco-D /Pelco-P |
| | 1 x RS232 OUT: 8pin Min DIN, Max Distance: 30m, Protocol: VISCA network use |
| | 1 x RS485: 2pin phoenix port, Max Distance: 1200m, Protocol: VISCA/ Pelco-D/Pelco-P |
| USB 3.0 Interface | 1 x USB 3.0: Type B |
| LINE IN Interface | 1 x LINE IN: 3.5mm Audio Input Interface |
| HDMI Interface | 1 x HDMI: Version 2.0 |
| 3G-SDI Interface | 1 x 3G-SDI: BNC type, 800mVp-p, 75Ω, Along to SMPTE 424M standard |
| Power Interface | DC-005/Φ2.0 (DC IN 12V) |

| General Specifications | |
|---|---|
| Input Voltage | DC 12V/PoE+ (802.3at) |
| Input Current | 2A (max.) |
| Operating Temperature | 0°C~40°C |
| Storage Temperature | -40°C~60°C |
| Power Consumption | 18W (max.) |
| Dimension | 200mm x 176.5mm x 165mm |
| Net Weight | About 1.8Kg |

**Note**

Product features and specifications are subject to change without notice.

## 4.3 Interface and Switch

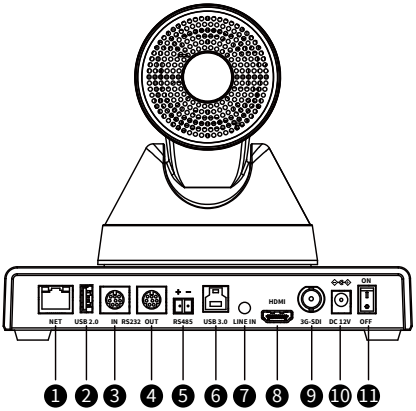


| No. | Interface/Switch |
|---|---|
| 1 | NET Interface |
| 2 | USB 2.0 Interface |
| 3 | RS232 IN Interface |
| 4 | RS232 OUT Interface |
| 5 | RS485 Interface |
| 6 | USB 3.0 Interface |
| 7 | LINE IN Interface |
| 8 | HDMI Interface |
| 9 | 3G-SDI Interface |
| 10 | DC 12V Interface |
| 11 | Power Switch |

## 4.4 Dimension

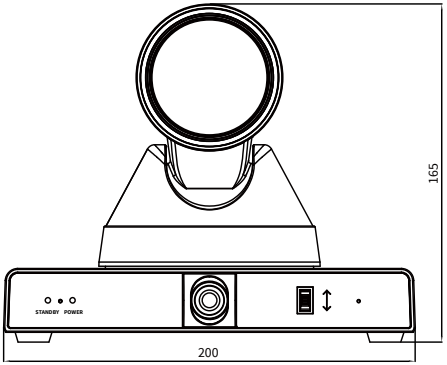


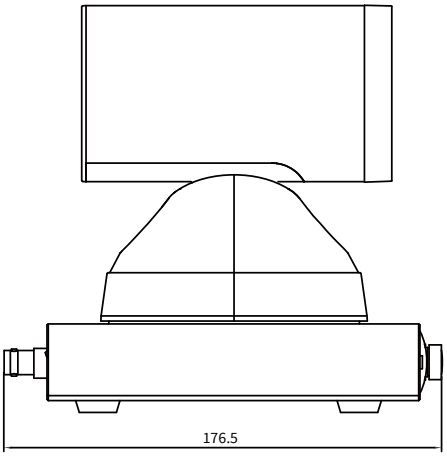


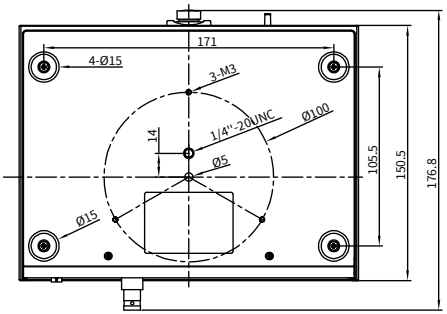

## 4.5 Installation

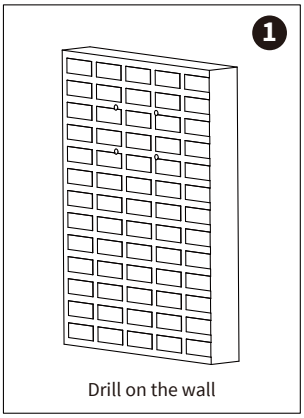

Drill on the wall

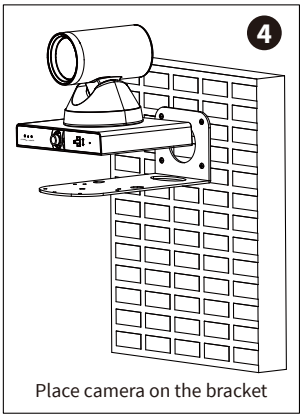

Place camera on the bracket

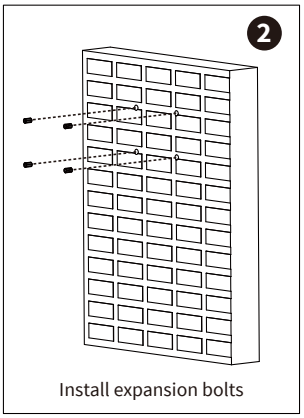

Install expansion bolts

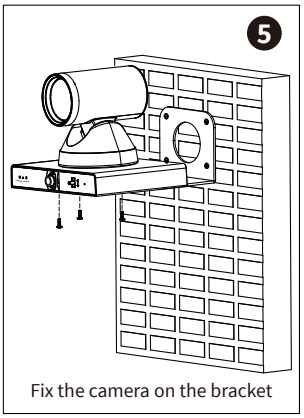

Fix the camera on the bracket

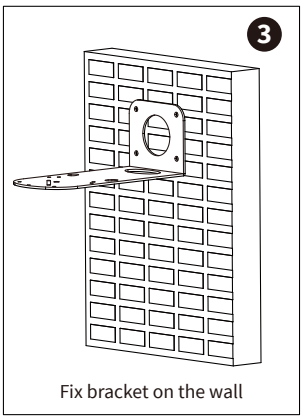

Fix bracket on the wall

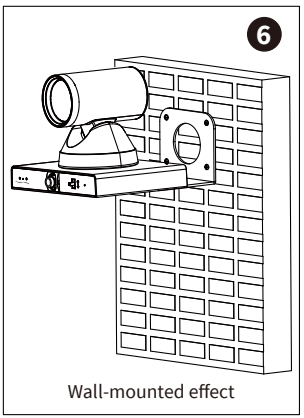

Wall-mounted effect

## 4.6 Remote Control

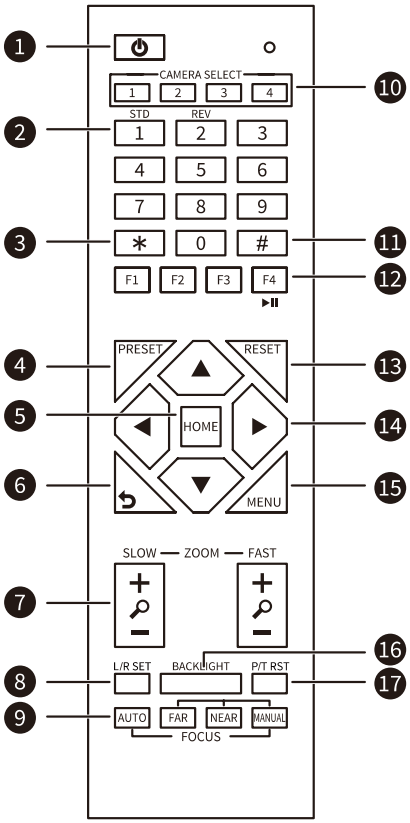


| Key Description |
|---|
| **1. ⏻ (Standby) Key** |
| Press to enter standby mode |
| **2. Number Keys** |
| To set preset or call preset |
| **3. * Key** |
| Use with other keys |
| **4. PRESET Key** |
| Set preset: [PRESET] + Number key (0-9) |
| **5. HOME Key** |
| Confirm selection or press to turn PTZ back to the middle position |
| **6. ⮌ (Return) Key** |
| Press to return to the previous menu |

| |
|---|
| **7. ZOOM Keys** |
| ● SLOW: Zoom In [+] or Zoom Out [-] slowly<br>● FAST: Zoom In [+] or Zoom Out [-] fast |
| **8. L/R SET Key** |
| ● Standard: Simultaneously press L/R SET + 1<br>● Reverse: Simultaneously press L/R SET + 2 |
| **9. FOCUS Keys** |
| Auto/Manual/Far-end/Near-end focus |
| **10. CAMERA SELECT Keys** |
| Press to select and control the camera |
| **11. # Key** |
| Use with other keys |
| **12. IR Remote Control Keys** |
| [*] + [#] + [F1]: Address 1<br>[*] + [#] + [F2]: Address 2<br>[*] + [#] + [F3]: Address 3<br>[*] + [#] + [F4]: Address 4 |
| **13. RESET Key** |
| Clear the preset position: [RESET] + Number key (0-9) |
| **14. PTZ Control Keys** |
| PTZ moved according to the arrow indicates |
| **15. MENU Key** |
| Enter or exit OSD menu |
| **16. BACKLIGHT Key** |
| Backlight ON/OFF: Press repeatedly to enable or disable the backlight compensation<br>NOTE:<br>● Effective only in auto exposure mode<br>● If there is a light behind the subject, the subject will become dark, press the backlight key to enable the backlight compensation. Press again to disable this function |
| **17. P/T RST (PTZ Reset) Key** |
| Press to preset Pan/Tilt self-test |
| **Shortcut Set** |
| [*] + [#] + [1]: OSD menu default English<br>[*] + [#] + [3]: OSD menu default Chinese<br>[*] + [#] + [4]: Display current IP address<br>[*] + [#] + [6]: Quickly recover the default<br>[*] + [#] + [8]: Display the camera version<br>[*] + [#] + [9]: Quickly set up inversion<br>[*] + [#] + [MANUAL]: Restore to default IP address |

# 5 GUI Settings

## 5.1 FEATURE MENU

Press [MENU] key to display the feature menu on the screen. Use the arrow key to move the cursor to desired item and press the [HOME] key to confirm to enter the corresponding sub-menu.

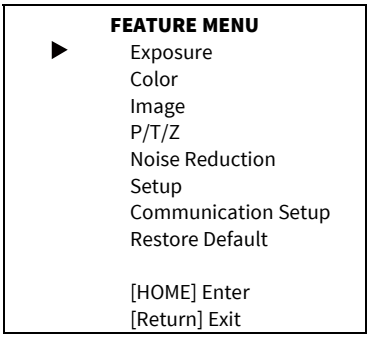


## 5.2 FEATURE EXPOSURE

When in feature menu page, move the cursor to [Exposure] and press [HOME] key to confirm to enter feature exposure page as shown as below.

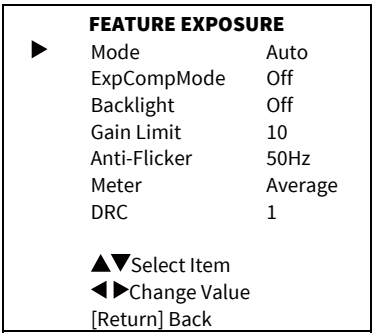


**Mode:** Auto, Manual, SAE, AAE, Bright.
**ExpCompMode:** On, Off (Effective only in Auto mode).
**ExpComp:** -7~7 (Effective only in ExpCompMode item to On).
**Backlight:** On, Off (Effective only in Auto mode).
**Bright:** 0~17 (Effective only in Bright mode).
**Gain Limit:** 0~15 (Effective only in Auto, SAE, AAE, Bright mode).
**Anti-Flicker:** Off, 50Hz, 60Hz (Effective only in Auto, AAE, Bright mode).
**Meter:** Average, Center, Smart, Top.
**Iris:** F1.8, F2.0, F2.4, F2.8, F3.4, F4.0, F4.8, F5.6, F6.8, F8.0, F9.6, F11.0, Close (Effective only in Manual, AAE mode).
**Shutter:** 1/30, 1/60, 1/90, 1/100, 1/125, 1/180, 1/250, 1/350, 1/500, 1/725, 1/1000, 1/1500, 1/2000, 1/3000, 1/4000, 1/6000, 1/10000 (Effective only in Manual, SAE mode).
**Gain:** 0~15 (Effective only in Manual mode).
**DRC:** 0~8.

## 5.3 FEATURE COLOR

When in feature menu page, move the cursor to [Color] and press [HOME] key to confirm to enter feature color page as shown as below.

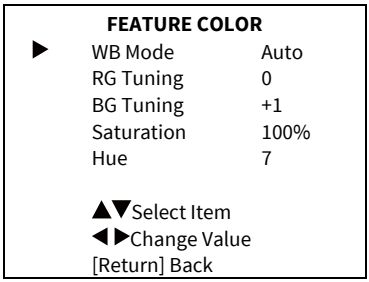


**WB Mode:** Auto, Indoor, Outdoor, One Push, Manual, VAR.
**RG:** 0~255 (Effective only in Manual mode).
**BG:** 0~255 (Effective only in Manual mode).
**RG Tuning:** -10~+10 (Effective only in Auto, One Push, VAR Mode).
**BG Tuning:** -10~+10 (Effective only in Auto, One Push, VAR Mode).
**Saturation:** 60%~200%.
**Hue:** 0~14.
**Color Temp:** 2500K~8000K (Effective only in VAR mode).

## 5.4 FEATURE IMAGE

When in feature menu page, move the cursor to [Image] and press [HOME] key to confirm to enter feature image page as shown as below.

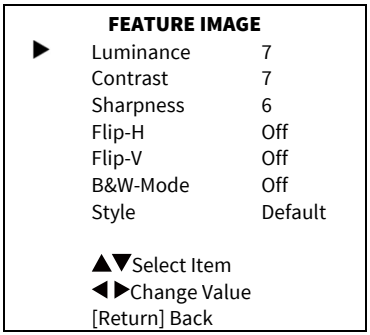


**Luminance:** 0~14.
**Contrast:** 0~14.
**Sharpness:** 0~11.
**Flip-H:** On, Off.
**Flip-V:** On, Off.
**B&W-Mode:** On, Off.
**Style:** Default, Norm, Bright, PC.

## 5.5 FEATURE P/T/Z

When in feature menu page, move the cursor to [P/T/Z] and press [HOME] key to confirm to enter feature P/T/Z page as shown as below.

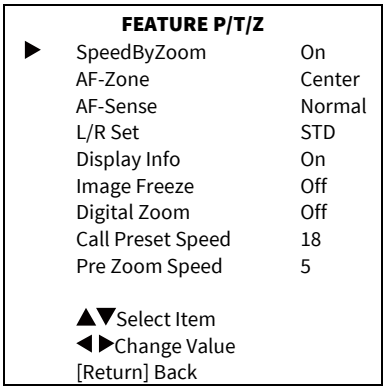


**SpeedByZoom:** On, Off.
**AF-Zone:** Front, Top, Center, Bottom.
**AF-Sense:** Low, Normal, High.
**L/R Set:** STD, REV.
**Display Info:** On, Off.
**Image Freeze:** On, Off.
**Digital Zoom:** Off, 2x, 4x, 8x, 16x.
**Call Preset Speed:** 1~24.
**Pre Zoom Speed:** 0~7.

## 5.6 FEATURE NOISE REDUCTION

When in feature menu page, move the cursor to [Noise Reduction] and press [HOME] key to confirm to enter feature noise reduction page as shown as below.

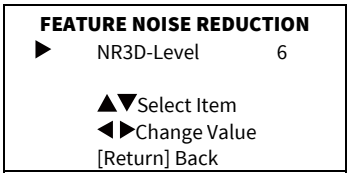


**NR3D-Level:** Off, 1~9.

## 5.7 FEATURE SETUP

When in feature menu page, move the cursor to [Setup] and press [HOME] key to confirm to enter feature setup page as shown as below.

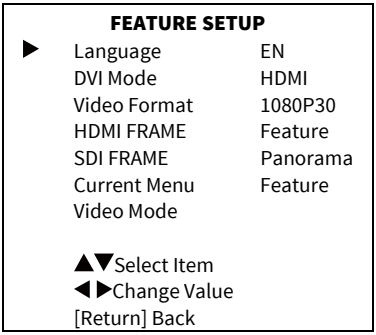


**Language:** EN, Chinese, Russian.
**DVI Mode:** HDMI, DVI.
**Video Format:** 1080P30, 4KP29.97, 4KP25, 4KP30, 1080P25.
**HDMI FRAME:** Feature, Panorama.
**SDI FRAME:** Feature, Panorama.
**Current Menu:** Feature, Panorama.
**Video Mode:** SDI-3G Mode (LEVEL-A, LEVEL-B).

### 5.8 FEATURE COMMUNICATION SETUP

When in feature menu page, move the cursor to [Communication Setup] and press [HOME] key to confirm to enter feature communication setup page as shown as below.

| FEATURE COMMUNICATION SETUP | | |
|---|---|---|
| ▶ | Protocol | VISCA |
| | V_Address | 1 |
| | V_AddrFix | Off |
| | Net Mode | Serial |
| | Baudrate | 9600 |
| | ▲▼Select Item | |
| | ◀▶Change Value | |
| | [Return] Back | |

**Protocol:** Auto, VISCA, PELCO-D, PELCO-P.
**V_Address:** 1~7 (Effective only in Auto, VISCA protocol).
**P_D_Address:** 0~254 (Effective only in Auto, PELCO-D protocol).
**P_P_Address:** 0~31 (Effective only in Auto, PELCO-P protocol).
**V_AddrFix:** On, Off (Effective only in Auto, VISCA protocol).
**Net Mode:** Serial, Paral.
**Baudrate:** 2400, 4800, 9600, 38400.

### 5.9 FEATURE RESTORE DEFAULT

When in feature menu page, move the cursor to [Restore Default] and press [HOME] key to confirm to enter feature restore default page as shown as below.

| FEATURE RESTORE DEFAULT | | |
|---|---|---|
| ▶ | Restore? | No |
| | ◀▶Change Value | |
| | [HOME] OK | |
| | [Return] Back | |

**Restore:** Yes, No.

Note

GUI menu and device information are subject to change without notice.

## 6 WEB Settings

### 6.1 Access Camera

Access the camera IP address in the browser (default teacher camera IP: 192.168.100.82; default student camera IP: 192.168.100.92) to pop up the login window, then input username (default: admin) and password (default: admin). After login, it will show as below:




### 6.2 Control Camera

All pages include two menu bars:
Real Time Monitoring: Video image displaying with function buttons.
Parameter Setup: Parameter configurating.

**A. Video Viewing Window**

The video viewing window is same as video resolution, the bigger the resolution, the bigger the playing area. Double click the viewing window to show full screen, double click again, to return to initialized size.
Status bar in viewing window shown as below:

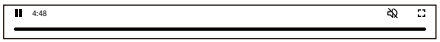


Full screen switch button.

**B. PTZ Setup**

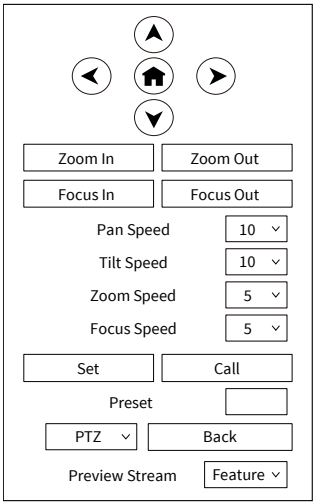


**1) Pan and Tilt Control**

The direction arrows and HOME button allow you to manually drive the camera to desired position.

**2) Zoom**

Zoom In and Zoom Out buttons allow for wide or narrow view of the space.

**3) Focus**

Focus In and Focus Out button allow for fine manual focus adjustment if the camera has any auto focusing problems on difficult object.

**4) PTZ Speeds**

Pan speed rate can be set to 1~24, Tilt speed rate can be set to 1~20. Zoom and Focus speed rate can be set to 1~7.

**5) PTZ Presets**

When the PTZ turns to the position that you would like to return to later, you can set presets for quick recall.

Type a number (0~254) into the preset box and click “Set” button to save.

When the PTZ turn to other position, input the preset number and click “Call” button to turn the PTZ back to the preset position.

**6) PTZ/OSD**

Move the cursor to dropdown menu, select and click “OSD” to open the on-screen menu and do menu settings on the interface. When the camera tracking mode is the follow mode, the WEB page cannot display the OSD menu, and the direction keys cannot be controlled.

**7) Preview Stream**

Select “Feature” or “Panorama” to preview feature or panorama camera.

**C. Language Selection**




Click to select “English”, “Simplified Chinese” or “Russian” to change language of the webpage.

## 6.3 Video Settings

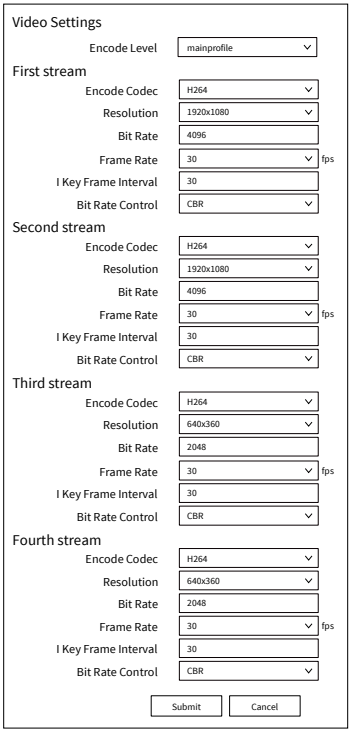

**1) Encode Level**

Support mainprofile and highprofile.

**2) Encode Codec**

Support H264, H265 and MJPEG.

**3) Resolution**

The first/second stream support 3840x2160, 1920x1080, 1280x720, 1024x576, 720x480, 720x408, 640x480, 640x360; The third/fourth stream support 720x480, 720x408, 640x360, 480x320, 320x240. The bigger the resolution, the clearer the image, and the larger the code stream, the more network bandwidth will be taken.

**4) Bit Rate**

You can specify the bit rate, the larger of the bit rate, the clearer of the image. The configuration of the bit rate needs to be combined with the network bandwidth. When the network bandwidth is narrow and the bit rate is configured larger, the video stream cannot be transmitted normally, and the visual effect will be worse.

**5) Frame Rate**

You can specify the size of the frame rate, the greater the frame rate, the smoother the image, the smaller the frame, the more sense of beating.

**6) I Key Frame Interval**

Set the interval between two I frames, the bigger the interval, the slower the response when opening the image for the first time.

**7) Bit Rate Control**

Two modes for bit rate control:
CBR (Constant Bit Rate): Video coder will be coding according to the preset speed.
VBR (Variable Bit Rate): Video coder will adjust the speed based on preset speed to gain the best image quality.

## 6.4 Image Settings

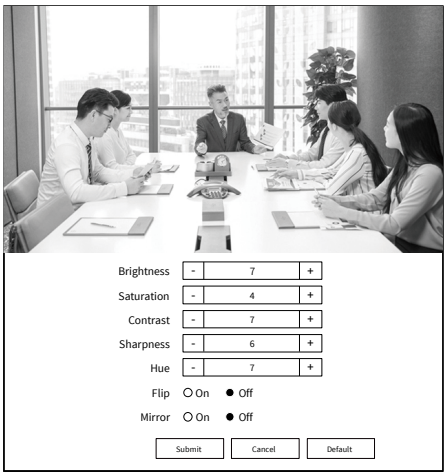


**1) Brightness**

Brightness of image: 0~14 (Default value is 7).

**2) Saturation**

Saturation of image: 0~14 (Default value is 4).

**3) Contrast**

Contrast of image: 0~14 (Default value is 7).

**4) Sharpness**

Sharpness of image: 0~11 (Default value is 6).

**5) Hue**

Hue of image: 0~14 (Default value is 7).

**6) Flip & Mirror**

Turn On/Off the Flip function.

Turn On/Off the Mirror function.

## 6.5 Audio Settings

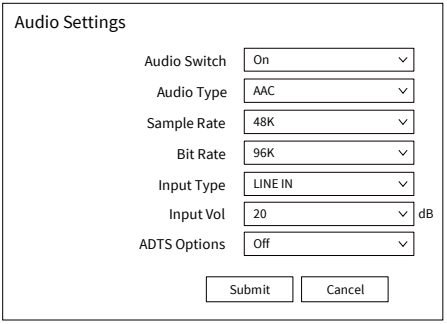

**1) Audio Switch**

Turn On/Off the audio switch.

**2) Audio Type**

Audio type AAC.

**3) Sample Rate**

Sample rate 44.1K or 48K.

**4) Bit Rate**

Bit rate 48K, 64K, 96K or 128K.

**5) Input Type**

Input type LINE IN or MIC IN.

**6) Input Vol**

Select the volume value to control the channel volume.

**7) ADTS Options**

Options: On/Off.

## 6.6 System Settings

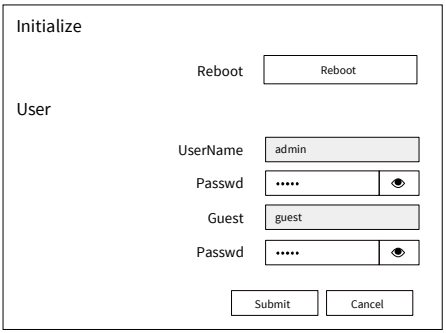


**1) Reboot**

Click “Reboot” to restart system.

**2) Username and Password**

Modify the password of username and guest (only use letters and numbers, the max password length is 32 bits).

## 6.7 Network Settings

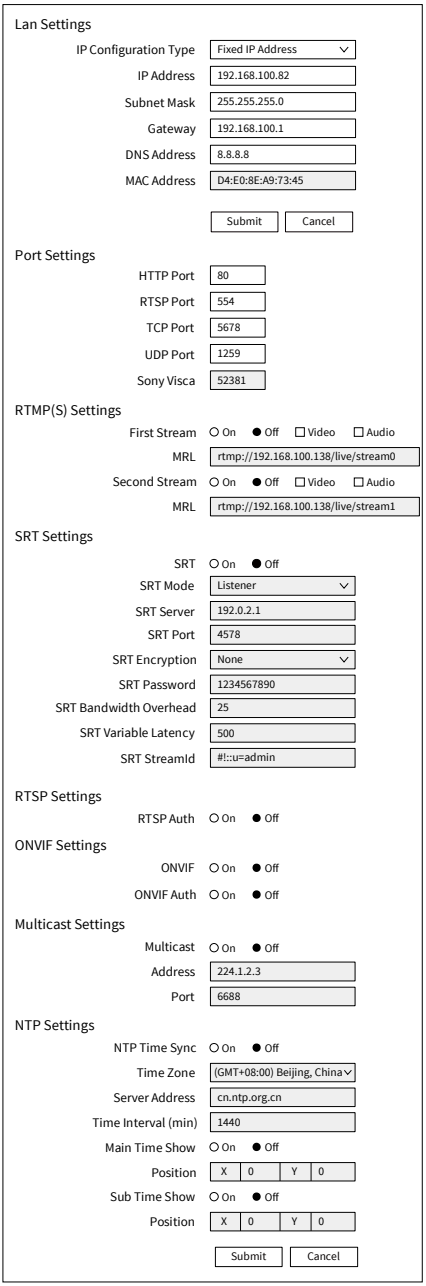

**1) Lan Settings**

Default teacher camera IP: 192.168.100.82.
Default student camera IP: 192.168.100.92.
The MAC address cannot be modified.

**2) Port Settings**

A. HTTP Port

The IP address identifies a network device and multiple network programs can run on the device, each network program uses the network port for data transmission. The port setting on this page is to set up which port the WEB SERVER program uses to transmit. During port mapping, it needs to be consistent with port number (default is 80).

B. RTSP Port

Set up the RTSP port, default is 554.

C. TCP Port

Set up the TCP port, default is 5678.

D. UDP Port

Set up the UDP port, default is 1259.

E. Sony Visca

Sony Visca 52381.

**3) RTMP(S) Settings**

Set the MRL of RTMP(S) and select “on”, “off”, “video” and “audio” functions to enable or disable video and audio in the two streams. Click “Submit” to take effect without restart.

**4) SRT Settings**

Turn On/Off SRT and set up the SRT Mode, SRT Server, SRT Port, SRT Encryption, SRT Password, SRT Bandwidth Overhead, SRT Variable Latency and SRT StreamID.

**5) RTSP Settings**

Turn On/Off the RTSP Auth.

**6) ONVIF Settings**

Turn On/Off the ONVIF and ONVIF Auth.

**7) Multicast Settings**

Turn On/Off Multicast, set up the Multicast Address (default is 224.1.2.3) and Port (default is 6688; 6688 is the multicast port of the first stream and 6690 is the multicast port of the second stream).

**8) NTP Settings**

Turn On/Off NTP time sync, Main time show and Sub time show; select the Time Zone; set up the Server address, Time interval and the Time Show Position of the two streams.

### 6.8 Device Information

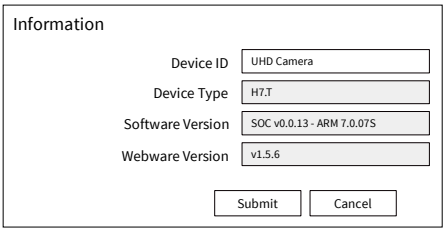


### 6.9 Download the Upgrade Program

If you need the camera upgrade program, please contact the manufacturer.

Note

WEB interface and device information are subject to change without notice.

## 7 Troubleshooting

**Image**

- The monitor shows no image

1) Ensure that the camera power supply is connected, the voltage is normal, and the power indicator is always on.
2) Turn off the power switch to check that the camera is self-testing.
3) Ensure the cable of video platform and TV that in correct connection.

- Image jitters after the camera is properly connected

1) Ensure that the camera installation is in stable position.
2) Check that any vibrating machinery or object near the camera.

- There is no video image in browser

That do not support IE browser and IE core browser, it is recommended to use Google, Firefox and Edge browsers. The camera video image will be displayed normally.

- Unable to access through the browser

1) Using PC to access the network to test that the network access can work properly to eliminate the network fault caused by cable and PC virus until the PC and camera can ping each other.
2) Disconnect the network, connect camera with PC separately and reset the IP address of PC if necessary.
3) Ensure that the IP address, subnet mask and gateway settings is correct.
4) Check that the MAC address is conflicts.
5) Check that the web port is modified, the default setting is 80.

- Forget the IP address or login password

Default teacher camera IP: 192.168.100.82.
Default student camera IP: 192.168.100.92.
Default username: admin.
Default password: admin.

**Control**

- Remote control does not work

1) Check and replace with new batteries.
2) Ensure that the camera working mode is correct.
3) Ensure that the address key of remote control can match the camera.

- Serial port cannot control

1) Ensure that the protocol, address and bit rate of the camera are consistent.
2) Ensure that the control cable is properly connected.

All trademarks are the property of their respective owners. ADERTECH assumes no responsibility for any errors that may appear in this publication. Product, pricing and feature information contained herein is subject to change without notice.

© 2023 ADERTECH Co Ltd. ADERTECH logo and its associated visual identity are trademarks or registered trademarks of ADERTECH and/or subsidiaries.