adertech

# EXT-U5H-TX

## 5K60 HDMI™ and USB 3.2 Extender 40m over CAT (Transmitter, HDMI IN)




## User manual

VER 1.0

# Thank you for purchasing this product

We have done everything possible to ensure that our equipment pleases our consumers. When solving any problems in the operation and connection ADERTECH equipment, it is best to contact authorized companies and specialists who work with our equipment. Our equipment is intended for professional use, so you have professional skills in using such equipment. ADERTECH is a manufacturer of a wide range of multimedia solutions.

# Surge protection device recommended

This product contains sensitive electrical components that may be damaged by electrical spikes, surges, electric shock, lighting strikes, etc. Use of surge protection systems is highly recommended in order to protect and extend the life of your equipment.

# Caution

The network cable connection method required for this product is direct connection. Please do not cross connect.

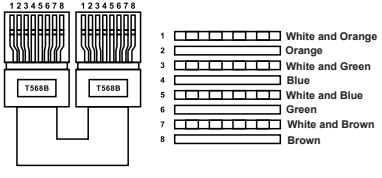


**Direct Interconnection Method**

# Table of Contents


1. Introduction..... 1
2. Features..... 1
3. Package Contents..... 1
4. Specifications..... 2
5. Operation Controls and Functions..... 4
6. API Commands..... 5
7. Application Example..... 9

# 1. Introduction

The extender EXT-U5 series can extend 5K HDMI™ video and USB 3.2 data up to 130ft/40m via a single CAT6a cable. The transmitter box (TX) features one HDMI™ input, one HDMI™ loop out and one USB 3.2 upstream port. It supports audio de- embedding, RS-232 signal pass-through and bi-directional 24V PoC function. The extender offers the most convenient solution for BYOD extension via a single CAT cable, and it is a perfect solution for commercial A/V applications.

# 2. Features

- ☆ 5K HDMI™ and USB 3.2 Extender with HDMI™ input and loop out
- ☆ Extend 5K@60Hz (4:4:4 8bit) and USB 3.2 Gen 1 signal up to 130ft/40m via a single CAT6a cable
- ☆ HDCP 2.3 compliant, to create a secure connection between the source and display
- ☆ USB 3.2 Gen 1 up to 2.5Gbps
- ☆ Features one HDMI™ input, one HDMI™ loop out and one USB 3.2 upstream port
- ☆ Supports audio de-embedding
- ☆ RS-232 pass-through
- ☆ HDR, HDR10+, Dolby Vision LLM and HLG pass-through
- ☆ Bi-directional 24V PoC (power over cable), when TX or RX gets power, the other end does not need an external power supply

# 3. Package Contents

① 1× 5K60 HDMI™ and USB 3.2 Extender (Transmitter)
② 1× 24V/2A Power Adapter
③ 1× 3-pin 3.5mm Phoenix Connector
④ 2× Mounting Ear
⑤ 4× Machine Screw
⑥ 1× User Manual

# 4. Specifications

| Technical | |
|---|---|
| USB Protocol | USB 3.2 Gen 1 |
| Transmission Rate | Up to 2.5Gbps |
| HDCP Compliance | HDCP 2.3 and HDCP 1.x |
| HDMI™ Compliance | HDMI™ 2.0b |
| HDMI™<br>Video Bandwidth | 18Gbps |
| HDMI™<br>Video Resolution<br>(Input & Output) | 640x480p60Hz, 800x600p60Hz, 1024x768p60Hz, 1280x1024p60Hz, 1360x768p60Hz, 1440x900p60Hz, 1440x1050p60Hz, 1600x1200p60Hz, 720x480i59.94Hz(480i59), 720x480p59.94Hz(480p59), 720x576i50Hz(576i50), 720x576p50Hz(576p50), 1280x720p50Hz(720p50), 1280x720p59.94Hz(720p59), 1280x720p60Hz(720p60), 1920x1080i50Hz(1080i50), 1920x1080i59.94Hz(1080i59), 1920x1080i60Hz(1080i60), 1920x1080p23.98Hz(1080p23), 1920x1080p24Hz(1080p24), 1920x1080p25Hz(1080p25), 1920x1080p29.97Hz(1080p29), 1920x1080p30Hz(1080p30), 1920x1080p50Hz(1080p50), 1920x1080p59.94Hz(1080p59), 1920x1080p60Hz(1080p60), 2560x1080p60Hz, 3440x1440p60Hz, 3840x2160p23.98Hz(2160p23), 3840x2160p24Hz(2160p24), 3840x2160p25Hz(2160p25), 3840x2160p29.97Hz(2160p29), 3840x2160p30Hz(2160p30), 3840x2160p50Hz(2160p50), 3840x2160p59.94Hz(2160p59), 3840x2160p60Hz(2160p60), 4096x2160p23.98Hz, 4096x2160p24Hz, 4096x2160p25Hz, 4096x2160p29.97Hz, 4096x2160p30Hz, 4096x2160p50Hz, 4096x2160p59.94Hz, 4096x2160p60Hz, 5120x1440p50Hz, 5120x1440p60Hz, 5120x2160p50Hz, 5120x2160p60Hz |
| HDR | HDR, HDR10, HDR10+, Dolby Vision, HLG |
| Color Depth | 8/10/12-bit |
| Color Space | RGB, YCbCr_4:4:4, YCbCr_4:2:2, YCbCr_4:2:0 |
| Audio Format | **HDMI™ IN, HDMI™ OUT:**<br>LPCM, Dolby Digital/Plus/EX, Dolby True HD, Dolby Atmos, DTS, DTS-EX, DTS-96/24, DTS High Res, DTS-HD Master Audio, DSD<br>**Analog Audio De-embedding:** LPCM 2CH (sample rate 32~192kHz) |
| Transmission Distance | 40m/130ft via CAT6a (F/FTP) cable<br>1.5m/4.9ft via USB 3.2 Gen 1 5Gbps passive cable<br>3m/9.8ft via HDMI™ passive cable |
| ESD Protection | IEC 61000-4-2: ±8kV (Air-gap discharge), ±4kV (Contact discharge) |

| | | |
|---|---|---|
| Audio Parameters | Output Level (Max) | 2.2dBu(1Vrms) @balanced audio |
| | Frequency Response | 20Hz to 20kHz (-/+0.5dB) |
| | Dynamic Range | >103dB@0dBu, 1kHzA-weighted |
| | Audio S/N Ratio | >103dB@0dBu, 1kHzA-weighted |
| | Audio THD+N | < 0.006%@+4dBu, 1KHz |
| | Audio Output Delay | <2ms |
| **Connections** | | |
| Transmitter | Input: 1× IN [HDMI™ type A, 19-pin female]<br>1× USB-B [Upstream, 9-pin female]<br>Output: 1× LOOP OUT [HDMI™ type A, 19-pin female]<br>1× AUDIO OUT [3.5mm audio jack]<br>1× AV-USB3 OUT [RJ45 connector, 24V PoC]<br>Control: 1× RS-232 [3-pin 3.5mm phoenix connector]<br>1× SERVICE [USB-C, firmware update port] | |
| **Mechanical** | | |
| Housing | Metal Enclosure | |
| Color | Black | |
| Dimensions | Transmitter: 118mm [W] × 111mm [D] × 25.5mm [H] | |
| Weight | Transmitter: 378g | |
| Power Supply | Input: AC 100~240V 50/60Hz; Output: DC 24V/2A<br>(US/EU standards, CE/FCC/UL certified) | |
| Power Consumption | Transmitter: 4W (Max) | |
| Operating Temperature | 0°C ~ 40°C / 32°F ~ 104°F | |
| Storage Temperature | -20°C ~ 60°C / -4°F ~ 140°F | |
| Operating Humidity | 20%~80% relative humidity, non-condensing | |
| Storage Humidity | 10%~90% relative humidity, non-condensing | |

# 5. Operation Controls and Functions

## Transmitter Panel

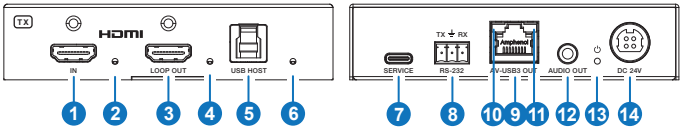


| No. | Name | Function Description |
|---|---|---|
| 1 | HDMI IN | HDMI signal input port, connected to a source device such as a computer with HDMI cable. |
| 2 | HDMI IN LED | The green LED will light up, when the HDMI IN port is connected to an active source device. |
| 3 | LOOP OUT | HDMI loop out port, connected to a display device such as a monitor with HDMI cable. |
| 4 | LOOP OUT LED | The green LED will light up, when the LOOP OUT port is connected to a display device. |
| 5 | USB HOST | Upstream USB-B port, connected to the host port on a computer. |
| 6 | USB LED | USB signal indicator.<br>▪ **Light On:** USB 3.2 signal is detected.<br>▪ **Light Blinking:** USB 2.0 signal is detected.<br>▪ **Light Off:** There is no USB signal. |
| 7 | SERVICE | USB 2.0 port, used for firmware upgrade and API control. |
| 8 | RS-232 | 3-pin phoenix connector, connected to a control system for RS-232 signal pass-through. |
| 9 | AV-USB3 OUT | Connects to the AV-USB3 IN port on RX with CAT6a cable, used for AV and USB signal transmission and 24V PoC power supply. |
| 10 | LINK LED | Connection signal indicator.<br>▪ **Light On:** TX and RX are connected and linked.<br>▪ **Light Blinking:** TX and RX link is off due to low power mode.<br>▪ **Light Off:** TX and RX are not connected. |

| No. | Name | Function Description |
|---|---|---|
| 11 | VIDEO LED | ▪ **Light On:** There is video signal transmission with HDCP encryption.<br>▪ **Light Blinking:** There is video signal transmission without HDCP encryption.<br>▪ **Light Off:** There is no video signal transmission. |
| 12 | AUDIO OUT | HDMI de-embedded audio output port, connected to an audio device. |
| 13 | Power LED | The red LED will light up, when the transmitter is powered on. |
| 14 | DC 24V | DC 24V/2A power input port. |

## 6. API Commands

The product supports API commands control. Connect the SERVICE port on the product to a PC, then open a Serial Command tool on PC to send API commands to control the product. The API commands list is shown below.

| ASCII Commands | | | | |
|---|---|---|---|---|
| SERVICE (USB-C port with virtual RS-232) communication protocol (Connect to laptop)<br>Baud rate: 115200 (fixed), Data bit: 8, Stop bit: 1, Parity bit: none | | | | |
| **Commands** | **Function** | **Example** | **Feedback** | **Default** |
| ? | Get the list of all commands | ? | | |
| help | Get the list of all commands | help | | |
| get version | Get all firmware version | get version | TX BOOT: V1.1.1<br>TX FW: V1.00.01<br>RX FW: V1.00.01<br>SUB MCU1: V1.0.1<br>SUB MCU2: V1.0.1 | |
| reboot | Reboot the device | reboot | Reboot…<br>System Initializing...<br>Initialization Finished!<br>TX FW v1.0.0<br>RX FW v1.0.0 | |
| reset | Reset to factory defaults | reset | Sure to RESET to default settings? Type "Yes" after next prompt to confirm… | |

| Commands | Function | Example | Feedback | Default |
|---|---|---|---|---|
| status | Get system status | status | Please refer to the note at the end of the list. | |
| set tx input x hdcp y | Set tx input x (x=0~8) HDCP y (y=0~2)<br>x=0:All Inputs, x=1:Input 1,<br>x=2:Input 2, x=3:Input 3,<br>x=4:Input 4, y=0:HDCP off,<br>y=1:HDCP 1.4, y=2:HDCP 2.3 | set tx input 0 hdcp 2<br>set tx input 1 hdcp 0 | TX all input HDCP 2.3<br>TX input 1 HDCP off | HDCP 2.3 |
| get tx input x hdcp | Get TX input x (x=0~8) HDCP status | get tx input 1 hdcp | TX input 1 HDCP 2.3 | |
| get tx input x connected | Get TX input x (x=0~8) cable connected status<br>x=0:All Inputs<br>x=1:Input 1, x=2:Input 2,<br>x=3:Input 3, x=4:Input 4 | get tx input 2 connected | TX input 2 connected<br>TX input 2 disconnected | |
| get tx input x signal | Get TX input x (x=0~8) signal status | get tx input 1 signal | TX input 1 3840x2160p 60Hz YUV 4:4:4 8bit<br>TX input 1 no signal | |
| set tx input x edid y | Set TX input x (x=0~8) EDID to (y=01~25)<br>y=01: Auto EDID (default)<br>y=02: Copy EDID from RX output<br>y=03: Copy EDID from TX output<br>y=04: 1080p60, 2CH PCM<br>y=05: 1080p60, 5.1CH DTS/DOLBY<br>y=06: 1080p60, 7.1CH DTS/DOLBY/HD<br>y=07: 4K60, 2CH PCM<br>y=08: 4K60, 5.1CH DTS/DOLBY<br>y=09: 4K60, 7.1CH DTS/DOLBY/HD<br>y=10: 5K60, 2CH PCM<br>y=11: 5K60, 5.1CH DTS/DOLBY<br>y=12: 5K60, 7.1CH DTS/DOLBY/HD<br>y=13: 4K30, 2CH PCM<br>y=14: 4K30, 5.1CH DTS/DOLBY<br>y=15: 4K30, 7.1CH DTS/DOLBY/HD<br>y=16: 720p60, 2CH PCM<br>y=17: 1920x1200p60, 2CH PCM<br>y=18: 1680x1050p60, 2CH PCM<br>y=19: 1600x1200p60, 2CH PCM<br>y=20: 1440x900p60, 2CH PCM<br>y=21: 1360x768p60, 2CH PCM<br>y=22: 1280x1024p60, 2CH PCM<br>y=23: 1024x768p60, 2CH PCM<br>y=24: User Defined 1<br>y=25: User Defined 2 | set tx input 1 edid 1 | TX input 1 EDID 01:auto EDID (default) | 1 |

| Commands | Function | Example | Feedback | Default |
|---|---|---|---|---|
| get tx input x edid | Get TX input x (x=0~8) EDID | get tx input 1 edid | TX input 1 EDID 01: auto EDID (default) | |
| get tx input x edid data | Get TX input x (x=0~8) EDID data | get tx input 1 edid data | TX input 1 EDID <00 FF FF FF….> | |
| set user edid x <y> | Set user defined EDID (x=0~2) to y<br>x=0: User Defined 1 and User Defined 2<br>x=1: User Defined 1<br>x=2: User Defined 2<br>y=00 FF FF FF ….. (y is 256 bytes EDID data) | set user edid 1 <00 FF FF FF ….> | User Defined 1 EDID is loaded | |
| get user edid x | Get user defined EDID (x=0~2) data<br>x=0: User Defined 1 and User Defined 2<br>x=1: User Defined 1<br>x=2: User Defined 2 | get user edid 1 | <00 FF FF FF….> | |
| set tx loop hdcp y | Set TX loop HDCP mode to (y=0~4)<br>y=0: Signal management<br>y=1: Follow sink (default)<br>y=2: Follow source<br>y=3: Force HDCP 1.4<br>y=4: Force HDCP 2.3 | set tx loop hdcp 1 | TX loop HDCP follow sink | 1 |
| get tx loop hdcp | Get TX loop HDCP mode | get tx loop hdcp | TX loop HDCP follow sink | |
| get tx loop connected | Get TX loop cable connected status | get tx loop connected | TX loop connected<br>TX loop disconnected | |
| get tx usb connected | Get TX USB cable connected status | get tx usb connected | TX USB connected<br>TX USB disconnected | |
| set hdbt update | Set SERVICE port to HDBT UART for FW update | set hdbt update | HDBT update… | |

**Note:** The feedback of the command of “status” is as follow.

```
================================================================================
Status Info 5K HDMI and USB 3.2 Extender over CAT
TX FW v1.0.0
TX      Cable       Signal                          HDCP        EDID
Input   Connected   3840x2160p60Hz YUV 4:4:4 8bit   HDCP 2.3    01_Auto EDID (default)
Loop    Connected   3840x2160p60Hz YUV 4:4:4 8bit   HDCP 2.3

TX_USB  Cable
TX_01   Connected
================================================================================
```

# 7. Application Example

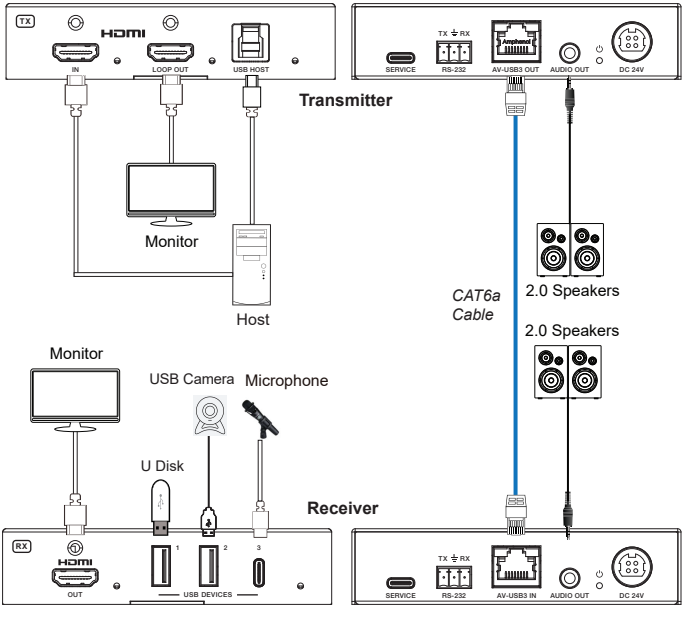


All trademarks are the property of their respective owners. ADERTECH is not responsible for any errors that may appear in this document.publication. Product, pricing and feature information contained herein is subject to change without notice.

© 2023 ADERTECH Co Ltd. The ADERTECH logo and associated visual identity are trademarks or registered trademarks of ADERTECH and/or its affiliates