adertech

MCH-WQCH series

Prosfessional Digital Wireless Conference Microphones



User manual

Content

1.Features 1
2.Safety instructions 2
3. Operation instruction for emitter model 3
3.1 Brief introduction ----- 3
3.2 Graphic instruction ----- 3
3.3 Installation graphic instruction ----- 3
3.4 Battery charger instruction ----- 3
4.Operation instruction for receiver 4
4.1 Working environment requirement for receiver ----- 4
4.2 Working instruction for receiver ----- 4
4.3 LCD monitor display graphic instruction ----- 4
5.Two-channel receiver 5
5.1Front panel of two-channel receiver ----- 5
5.2 Back panel of two-channel receiver ----- 5
6. Four-channel receiver 6
6.1Front panel of four-channel receiver ----- 6
6.2 Back panel of four-channel receiver ----- 6
7. Eight-channel receiver 7
7.1 Front panel of eight-channel receiver ----- 7
7.2 Back panel of eight-channel receiver ----- 7
8.Product parameters ----- 7
8.1Receiver's parameters 8
8.2 Emitter's parameters ----- 8
8.3Comprehensive parameters ----- 8
9. Solutions to breakdowns 9
10.Connection instruction 10

1.Features

1. This series products adopt the most advanced chip synthesis technology to handle transmitting and receiving parts, just need audio input and output.

2. This series product adopt advanced digital pilot technique, using UHF international standard frequency range, 500 MHz~900MHz. Compared to the VHF low frequency range, UHF has broader resources, make electromagnetic space clearer and lower interference which from VCD、DVD and so on equipment.

3. Controlled by microprocessor, PLL phase-locked loop frequency synthesis technology, every channel has optional 100 frequencies, 0.25 MHz by step, more flexible for use.

4. This series product adopt ID identification technology, each channel has its own ID code, strong anti-interference ability, suitable for all kinds of large, medium and small meeting.

5. Auto-mute and noise canceller circuit, eliminating the noise of turning on and off the machine

6. This series of products with the function of prevent noise, far pick up distance, smooth voice, high sound reduction

7. This series of products use high quality of components, apply SMT production, select only the high quality end-product.
Increase the stability and working life of the product.

8. Is provided for each type of LCD liquid crystal display, show multiple key information, working condition be clear at a glance, makes it easy to operate and monitor and convenience, so as to improve the performance.

9. This series of products are all adopt XLR balanced output and 6.3 unbalanced output, independently or combined, fitting in all kinds of equipment connection and avoiding the chaos and embarrassments caused by equipment unmatched.

2.Safety instructions

- Read this instruction manual.
- Keep this instruction manual for future reference.
- Follow all instructions in this instruction manual.
- Do not place the product near any heat sources such as radiators, stoves, or other devices that product heat. If you are not going to use the product for a long time, pull out the battery. Do not throw or drop the product in case it causes severe damages.
- Be aware of the supply voltage. Only the supply voltage listed on the instruction manual fits the product.
- Only use accessories specified by our company.
- Never take apart the device. If devices are took apart by customers in breach of this instruction, the warranty becomes null and void. Turn to the professional mechanic or local dealer for help if there is something wrong with the product.
- If components are needed to replaced, replace them with original components produced by our company.
- Leave the devices the minimum space of 30 mm for proper ventilation.Do not cover the vent with newspapers, cloths, curtains, etc.

  Do not place the devices near fire or water.

  Only professional mechanic can assemble the devices if it is labeled with hazard warning sign “ ϟ ” .

  Recycle the replaced battery.

  The devices can be used in tropical or temperate regions.

  Only for safe use in the area with an altitude of below 2,000 meters.



※ If the device is not going to be used, turn it off.
And charge the battery per 3 months, if not the battery will be not effective.

3. Operation instruction for emitter model

3.1 Brief introduction

1.High-fidelity microphone head, condenser pickup, provide the top definition and directivity.
2.LCD screen display working condition.
3.Built-in 3.7V lithium battery, design international USB socket.

3.2 Graphic instruction

1.Connect the USB charge interface(indicator 5) and the power to charge up the battery.
2.Touch the power switch for 0.5 second(indicator 4), LCD screen and light ring put on(indicator3) means the unit is on working.
3.LCD screen show the working condition.
4.Put off the unit when long press the power button 1 second.

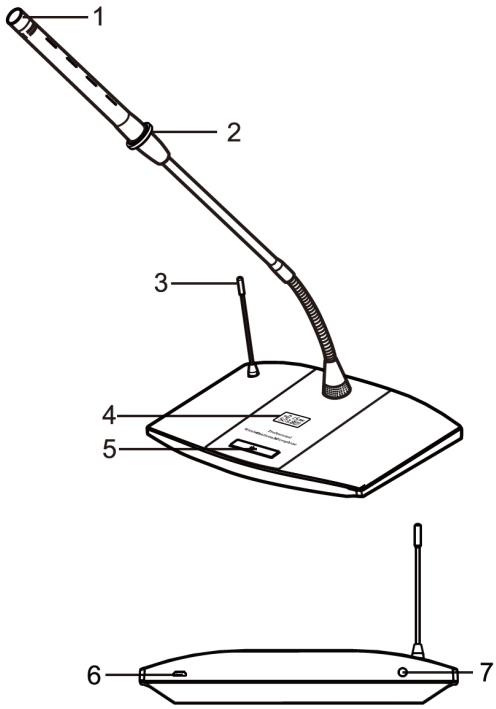

1.microphone head 2.light ring
3.transmit antenna 4.LCD screen
5.Power switch 6.USB charge interface
7.IR window

3.3 Installation graphic instruction

1.LCD screen graphic
2.Installation graphic of emitter

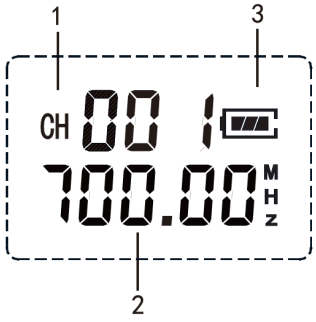

1.Channel 2.Frequency 3.Power display

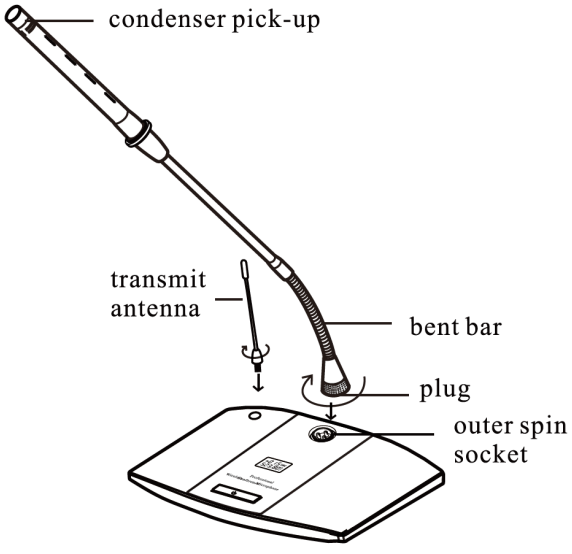

3.4 Battery charger instruction

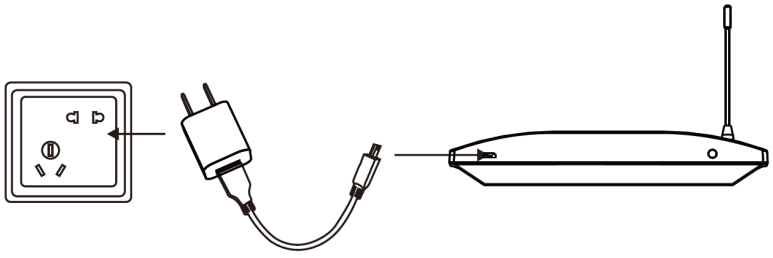

CAUTION: PLEASE CHARGE UP THE BATTERY PER 3 MONTHS IF DO NOT USE FOR A LONG TIME. USE THE SAME TYPE BATTERY IF YOU WANT TO CHANGE THE BATTERY. IF NOT, IT WILL BE DANGEROUS.

4.Operation instruction for receiver

4.1 Working environment requirement for receiver

Connect the receiver with antenna and adjust the antenna to vertical.

Note that mental, wall, ceiling, human body will weaken the emitter's signal. For best effect, please follow the rules. The emitter should be placed as near the spot as possible. Keep the minimum distant of 1.5m with mental, wall, scaffold, ceiling, etc. Make sure the emitter and receiver are accessible straight forward.

4.2 Working instruction for receiver

1. Connect the electricity supply.

2. After turning on the receiver, the LCD screen will show the working parameters.

3. Connect the receiver s MIX OUT and MIC with audio connecting line.

Adjust to reasonable volume.

4.Set up the frequency of the channel.

The receiver has A, B, C, D, four independent groups. Press or long press UP or DOWN to change the frequency. After the frequency is selected, let the IR window both in the receiver and the microphone face-to-face distance about 20cm.Press the SET to emit the signal. LCD monitor show OK means finishing the setting.

5.Each microphone can be used in every channel.

6.Equiped independent on/off button for each channel, press the “⏻” button can on/off the corresponding channel in the working situation.

4.3 LCD monitor display graphic instruction

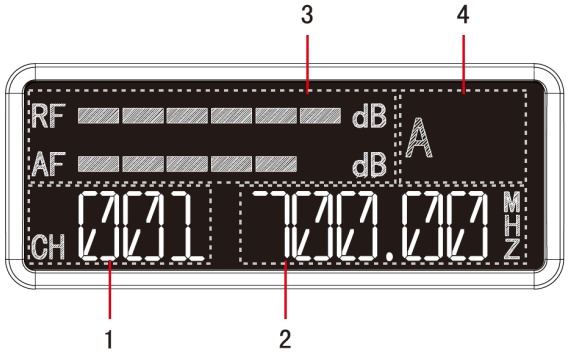

1. Channel number 2.Working frequency
3.Audio and Signal level 4. Frequency group

5.Two-channel receiver

5.1Front panel of two-channel receiver

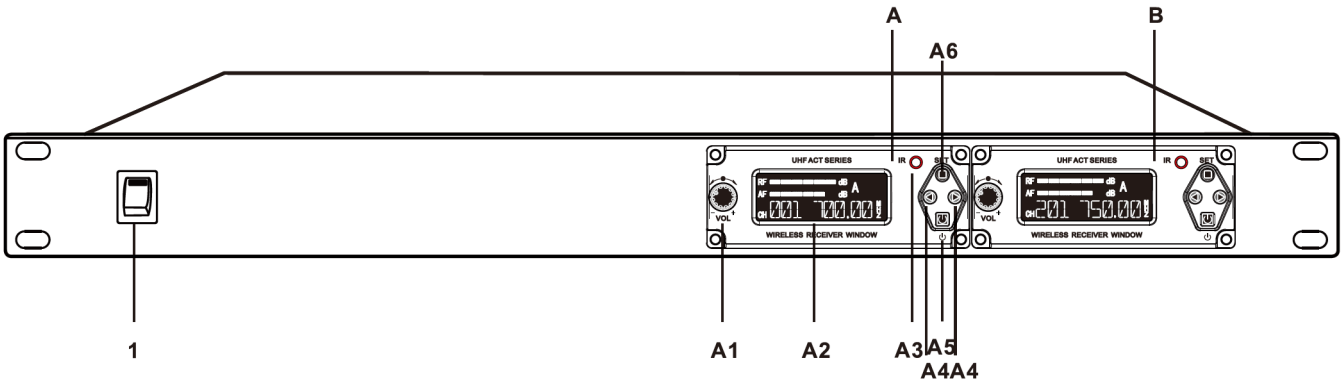

1.Power switch
A channel: A1.Volume knob A2. LCD screen A3.IR window A4. Frequency selection button
A5.Channel independent power switch A6.SET
B channel: Same as A channel.

5.2 Back panel of two-channel receiver

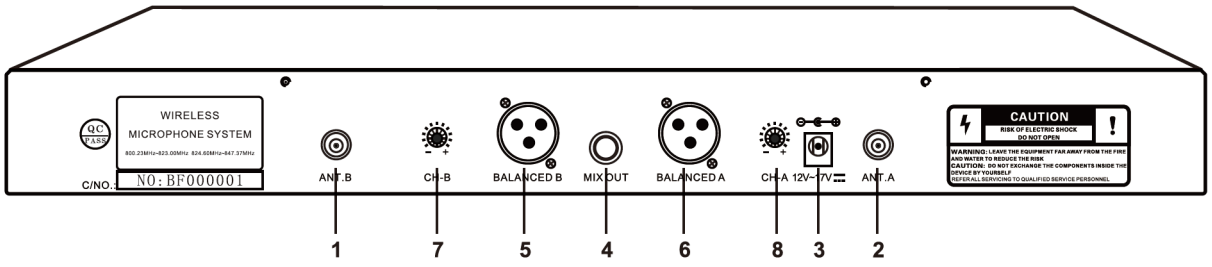

1. B channel antenna port
2. A channel antenna port
3. DC socket
4. Mixed unbalanced output
5. B channel balanced output
6. A channel balanced output
7. B channel SQ knob
8. A channel SQ knob

6. Four-channel receiver

6.1Front panel of four-channel receiver

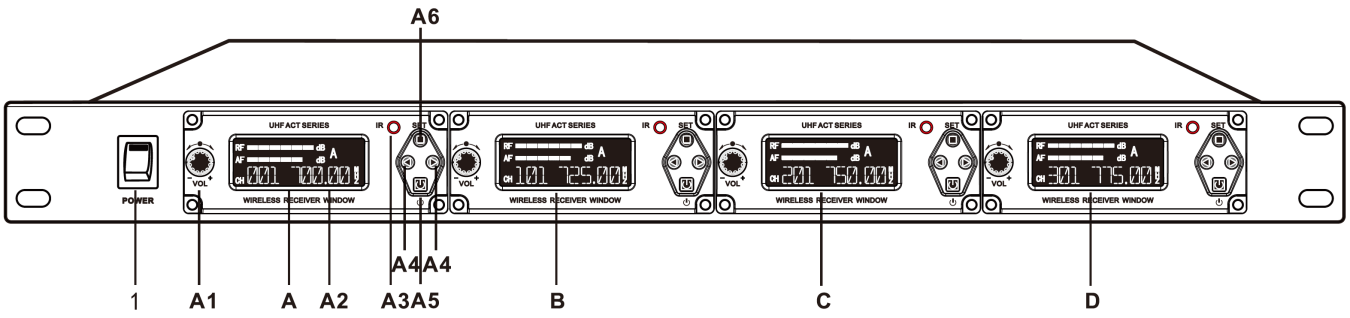

1.Power switch
A channel: A1.Volume knob A2. LCD screen A3.IR window A4. Frequency selection button
A5.Channel independent power switch A6.SET
B. C.D channel: Same as A channel.

6.2 Back panel of four-channel receiver

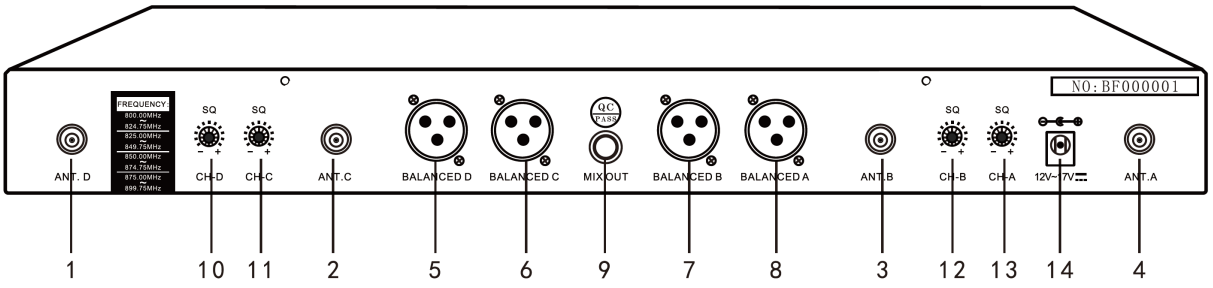

1.D antenna socket
2.C antenna socket
3.B antenna socket
4.A antenna socket
5.D channel balance output
6.C channel balance output
7.B channel balance output
8.A channel balance output
9. Mixed unbalanced output
10. D channel SQ knob
11.C channel SQ knob
12.B channel SQ knob
13.A channel SQ knob
14.DC socket

7. Eight-channel receiver

7.1 Front panel of eight-channel receiver

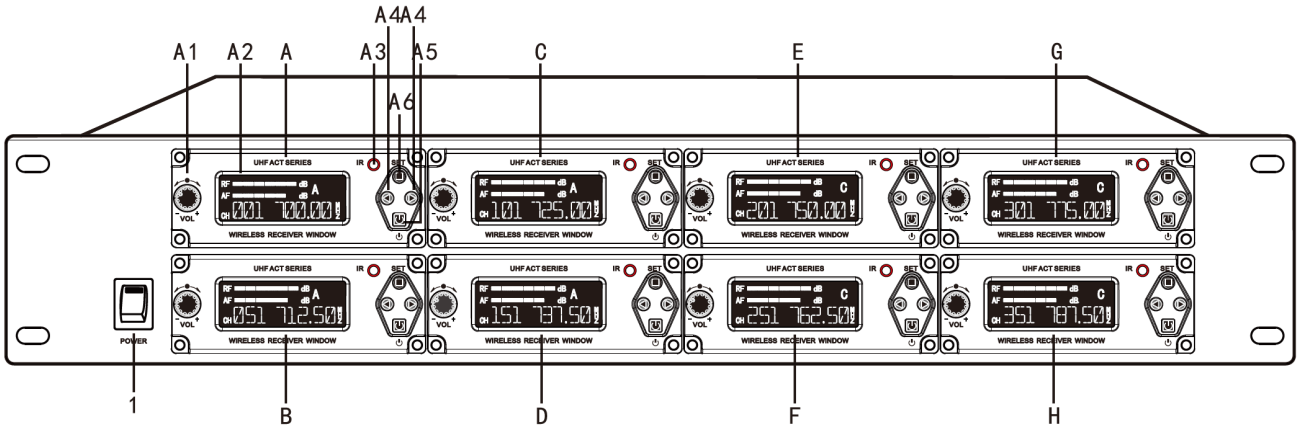

1.Power switch
A channel: A1.Volume knob A2. LCD screen A3.IR window A4. Frequency selection button
A5.Channel independent power switch A6.SET
B.C.D. E. F.G.H channel: Same as A channel.

7.2 Back panel of eight-channel receiver

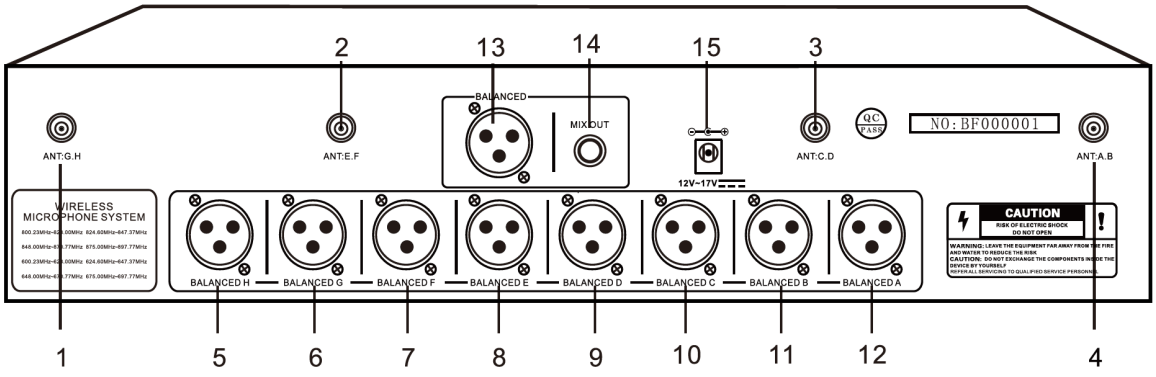

1.G.H antenna socket
2.E.F antenna socket
3.C.D antenna socket
4.A. Bantenna socket
5.H channel balance output
6.G channel balance output
7.F channel balance output
8.E channel balance output
9.D channel balance output
10.C channel balance output
11.B channel balance output
12.A channel balance output
13.Mixed balance output
14.Mixed unbalance output
15.DC socket

8.Product parameters

8.1Receiver's parameters

Mode of oscillation:	PLL synthesized
Frequency range:	UHF 600-699.75MHZ
Frequency stability:	±0.001%
Maximum frequency deviation:	±30KHz
Modulation system:	FM
Signal-to-noise ratio:	＞105dB
Distortion factor:	＜0.5%@1KHz
Sensitivity:	1.2/UV@S/N=12dB
Power supply:	DC:12V-17V
Audio output:	Independent 0-400mV
	Mixed style 0-300mV
Power:	Two channel 3w
	Four channel 6W
	Eight channel 12W

8.2 Emitter's parameters

Power supply:	Built-in 3.7V lithium battery
Power consumption:	100mA
Carrier frequency:	UHF 600-699.75MHZ
Frequency Stability:	±30KHz
Signal-to-noise ratio:	＞105dB
Adjacent frequency interference ratio:	＞80dB
Dynamic range:	≥100dB
Type:	Condenser
Polarity Mod:	Unidirectional
Frequency response:	40Hz～20KHz
Sensitivity:	-43±3dB@1KHz
Power:	10mW

8.3Comprehensive parameters

Working frequency:	UHF 600-699.75MHZ
Channel No:	400frequencies totally
Modulation mode:	FM
Channel spacing:	250KHz
Frequency stability:	±0.001%
Dynamic range:	≥100dB
Maximum frequency deviation:	±30KHz
Frequency response:	40Hz～20KHz
Comprehensive signal-to-noise ratio:	>105dB
Comprehensive distortion factor:	＜0.5%
@1Kz	
Operating distance:	about 100 meter(in the open air)
Operating temperature:	-10℃~50℃

9. Solutions to breakdowns

Breakdowns	Causes	Solutions
Receiver can receive signal but with noise interference	Battery level is too low	Charge up the battery
	There is the same frequency emitter used at the same time	Turn off other emitter or change to other frequency
The microphone's LCD screen is not operating	Battery level is too low	Charge up the battery
The microphone cannot be turned on	Battery level is too low	Charge up the battery
The receiver is not energized	The utility is not energized	Check the electric socket
The receiver cannot be connected	The microphone is off	Turn on the microphone
	The microphone's frequency does not fit in the receiver's	Adjust the frequency
	The microphone is too far away	Keep the microphone near
The receiver can receive but without sound	The volume knob is at the minimum	Adjust the volume
	Improper connection of audio connecting	Reconnect the audio connection
Before the emitter is on, the receiver can receive but with noise	There might be other devices with the same frequency near	Change the frequency of the system to avoid interference
On and off sound	Too far away	Keep it near
Effective operating distance is short	Complicated environment	Avoid metal, wall, crowds, etc as they will weaken the signal
	Haven't install the receiving antenna	Install the receiving antenna

Care and maintenance

Before fixing or cleaning the device, cut of the electricity supply. Clean it with soft cloth. For spots, clean it with cloth that has neutral cleaning solvent and dry it with another cloth. Do not use gasoline, diluents or any other chemical product, or else the surface will be damaged.

10.Connection instruction

Operations

1.According to the picture, connect the receiver with other devices, the MIX OUT with MIC or the OUT A,B,C,D with MIC.

2. Power supply 12-17V. After turning on the receiver, set up the reasonable volume.

3. Please charge up the battery per 3 months if do not use for a long time.

Connection instruction

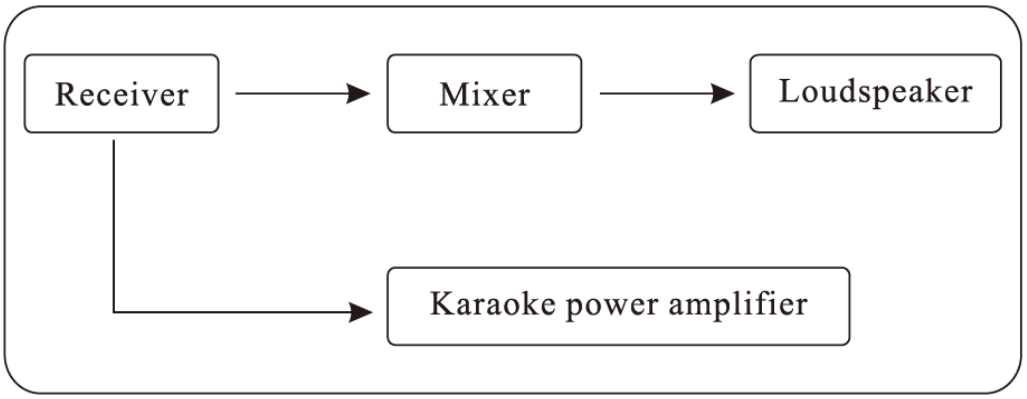

Attention:

1 meter above floor

At least 1meter to wall

Antenna vertical to the receiver

All trademarks are the property of their respective owners. ADERTECH is not responsible for any errors that may appear in this document publication. Product, pricing and feature information contained herein is subject to change without notice. © 2023 ADERTECH Co Ltd.
The ADERTECH logo and associated visual identity are trademarks or registered trademarks of ADERTECH and/or its affiliates.