ADERTECH

CL-U8H-14A

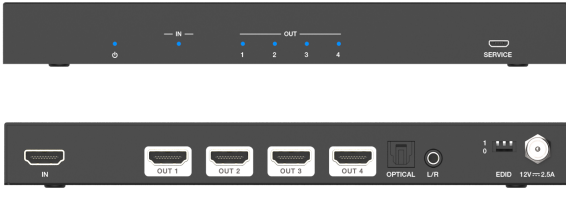

48Gbps UHD 1:4 HDMI Splitter
User Manual Version 1.1

Thank you for purchasing this product

We have done everything possible to ensure that our equipment pleases our consumers. When solving any problems in the operation and connection ADERTECH equipment, it is best to contact authorized companies and specialists who work with our equipment. Our equipment is intended for professional use, so you have professional skills in using such equipment. ADERTECH is a manufacturer of a wide range of multimedia solutions.

Surge protection device recommended

This product contains sensitive electrical components that may be damaged by electrical spikes, surges, electric shock, lighting strikes, etc. Use of surge protection systems is highly recommended in order to protect and extend the life of your equipment.

Table of Contents

1. Introduction..... 1
2. Features..... 1
3.Package Contents..... 1
4. Specifications..... 2
5.Operation Controls and Functions..... 3
6.Auto Downscaling & Auto Converting..... 5
7.Application Example..... 6

1. Introduction

This 1x4 splitter can distribute one HDMI source signal to any four display devices. Video resolution is up to 8K@60Hz 4:2:0 12bit. It supports data rates up to 48Gbps to comply with HDMI 2.1 and HDCP 2.3 requirements. It includes several features for ease of integration, such as EDID management and cable equalization. Resolution downscaling is also supported. It is an easy-to-use solution for HDMI installation, and can transmit the audio signal to any sound system with 5.1/2.0CH. This multi-functional product can be widely applied in scenarios of demonstration, video conference, multimedia teaching and other occassions.

2. Features

- ☆ HDCP 2.3 compliant
- ☆ Supports 48Gbps FRL and 18Gbps TMDS video bandwidth
- ☆ Supports resolution up to 8K@60Hz 4:2:0 12bit, 4K@120Hz 4:4:4 12bit 8K@30Hz 4:4:4 12bit, as specified in HDMI 2.1
- ☆ VRR, ALLM, QMS, QFT, SBTM supported
- ☆ Support HDR, HDR10, HDR10+, Dolby Vision, HLG pass through
- ☆ Support HDMI audio formats: LPCM 7.1CH, Dolby TrueHD, Atmos, DTS-HD Master Audio
- ☆ Supports resolution auto downscaling and converting on each output port
- ☆ Advanced EDID management

3. Package Contents

- 1 × 8K HDMI 1x4 Splitter
- 1 × 5V/2A Multinational Power Supply
- 1 × User Manual

4. Specifications

Technical	
HDMI Compliance	HDMI 2.1
HDCP Compliance	HDCP 2.3, HDCP 1.4
Video Bandwidth	48Gbps FRL and 18Gbps TMDS
Video Resolution	Up to 8K@60Hz 4:2:0 12bit, 4K@120Hz 4:4:4 12bit, 8K@30Hz 4:4:4 12bit
Color Depth	8/10/12-bit
Color Space	RGB, YCbCr 4:4:4 / 4:2:2. YUV 4:2:0
HDR	HDR, HDR10, HDR10+, Dolby Vision, HLG
Audio Formats	HDMI input/output: LPCM, Dolby Digital/Plus/EX, Dolby True HD, Dolby Atmos, DTS, DTS-EX, DTS-96/24, DTS High Res, DTS-HD Master Audio, DSD Audio de-embedding output: Optical: LPCM/Dolby/DTS 5.1CH Analog: LPCM 2CH
ESD Protection	IEC 61000-4-2: ±8kV (Air-gap discharge) & ±4kV (Contact discharge)
Connection	
Input	1 × HDMI IN [Type A, 19-pin female]
Output	4 × HDMI OUT [Type A, 19-pin female] 1 × OPTICAL [S/PDIF] 1 × L/R [3.5mm Stereo Mini-jack]
Control	1 × SERVICE [USB Type C, Update port]
Mechanical	
Housing	Metal Enclosure
Color	Black
Dimensions	176mm (W) × 68mm (D) × 18mm (H)
Weight	295g
Power Supply	Input: AC 100-240V 50/60Hz, Output: DC 5V/2A (US/EU standards, CE/FCC/UL certified)

Power Consumption	6W (Max)			
Operation Temperature	0°C ~ 40°C / 32°F ~ 104°F			
Storage Temperature	-20°C ~ 60°C / -4°F ~ 140°F			
Relative Humidity	20~90% RH (non-condensing)			
Recommended HDMI Cable				
Video Resolution	8K	4K60	4K24	1080P
HDMI Cable Length (HDMI IN / OUT)	3m/10ft (Ultra HDMI 2.1)	8m/26ft	12m/39ft	15m/49ft
The use of "Premium High Speed HDMI" cable is highly recommended.				

5. Operation Controls and Functions

Front Panel

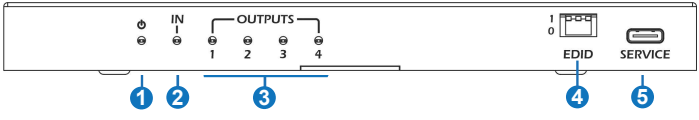

No.	Name	Function Description
1	POWER LED	When the device is powered on, the blue LED will be on.
2	IN LED	When the HDMI IN port connects an active source device, the blue LED will be on.
3	OUT LED (1~4)	When the HDMI OUT 1/2/3/4 port connects a display device and outputs signal, the corresponding blue LED will be on.
4	EDID DIP SW	Check DIP Switch meaning in the EDID table below.
5	SERVICE	Firmware update port.

Rear Panel

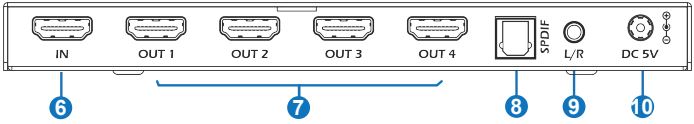

No.	Name	Function Description
6	IN port	HDMI signal input port, connecting to HDMI source device such as DVD or PS5 with an HDMI cable.
7	OUT port (1~4)	HDMI signal output port, connecting to HDMI display device such as TV or Monitor with an HDMI cable.
8	SPDIF	Optical fiber audio output port.
9	L/R	Analog audio output port.
10	Power port	5V/2A Power input port.

EDID Table

DIP SWITCH	EDID Modes
111	Copy OUT port sink EDID (as factory default)
110	4K60(4:4:4), 2.0CH
101	FRL12G_8K_HDR, 2.0CH
100	FRL12G_8K_HDR, 5.1CH
011	FRL12G_8K_HDR, 7.1CH
010	FRL10G_8K_HDR, 2.0CH
001	FRL10G_8K_HDR, 5.1CH
000	FRL10G_8K_HDR, 7.1CH

6. Auto Downscaling & Auto Converting

This 8K HDMI splitter supports auto downscaling and auto converting on all outputs. It will automatically output the correct HDMI signal according to the EDID of the display device. As for this splitter, before downscaling it will compare all the EDID of the connected display devices and select the minimum resolution to downscale and output. For example:

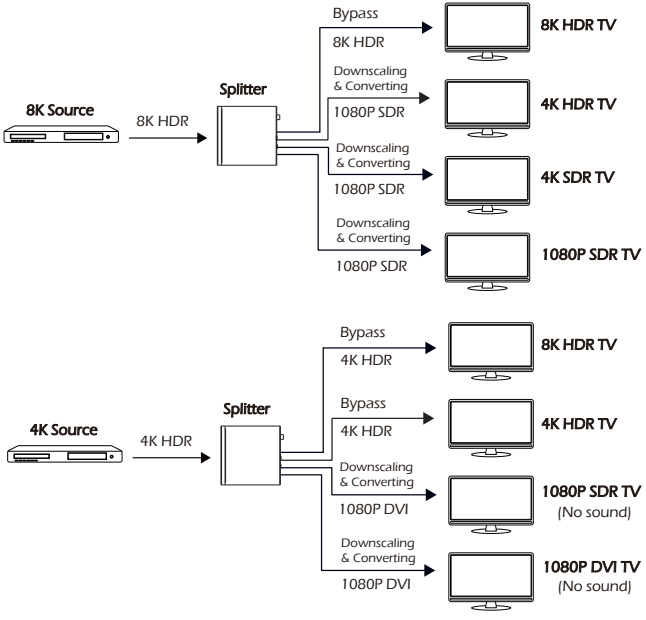

NOTE: If the source resolution is downscaled and converted to 1080P DVI according to the EDID of display devices, it will be output without sound on TV.

Downscaling will not work in the following conditions:

1. The input source is 8K DSC format.
2. The resolution of input source is not supported by the splitter.

7. Application Example

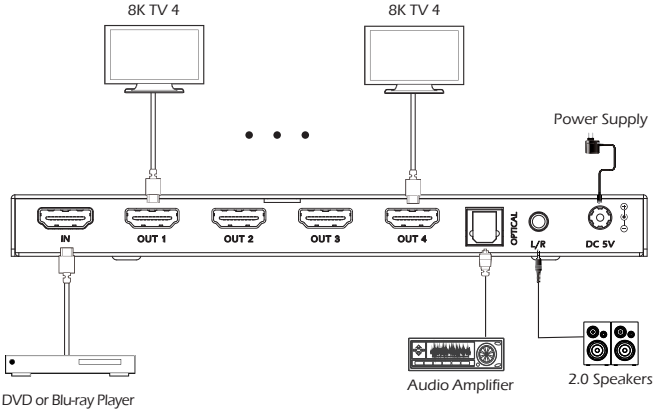

All trademarks are the property of their respective owners. ADERTECH is not responsible for any errors that may appear in this document publication. Product, pricing and feature information contained herein is subject to change without notice.
© 2023 ADERTECH Co Ltd.
The ADERTECH logo and associated visual identity are trademarks or registered trademarks of ADERTECH and/or its affiliates.