ADERTECH

H1BT-U4H-70B

HDMI Extender over Cat5e/Cat6 (HD BaseT)

User Manual

VER: 1.2

Thank you for choosing ADERTECH products

We have done everything possible to ensure that our equipment pleases our consum-ers. When solving any problems in the operation and connection of ADERTECH equipment, it is best to contact authorized companies and specialists who work with our equipment. Our equipment is intended for professional use, so you have professional skills in using such equipment. ADERTECH is a manufacturer of a wide range of multimedia solutions.

Surge protection device recommended

This product contains sensitive electrical components that may be damaged by electrical spikes, surges, electric shook, lighting strikes, etc. Use of surge protection systems is highly recommended in order to protect and extend the life of your equipment.

Table of Contents

I. Introduction.....3
II. Features.....3
III. package.....4
IV. Specifications.....5
V. Operation Controls and Functions.....6
VI. Application Example.....12

Caution

The extender using UTP termination, which follows the standard of direct interconnection method.

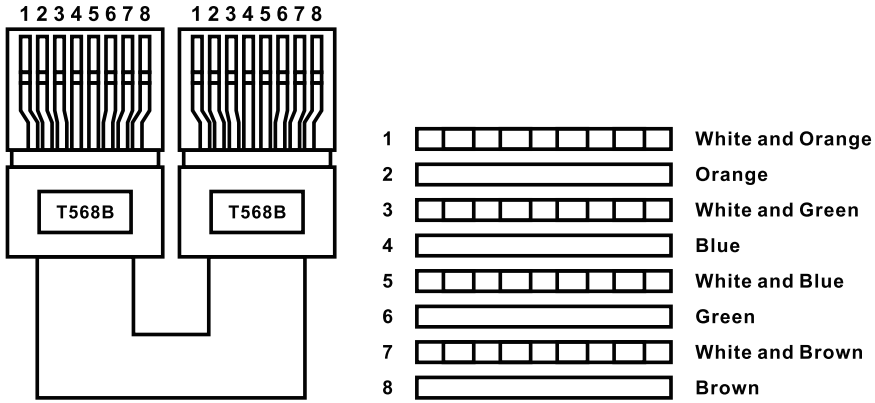

Direct interconnection method

Advanced

The extender will start protection mode automatically when using UTP termination, which follows the standard of cross interconnection method.

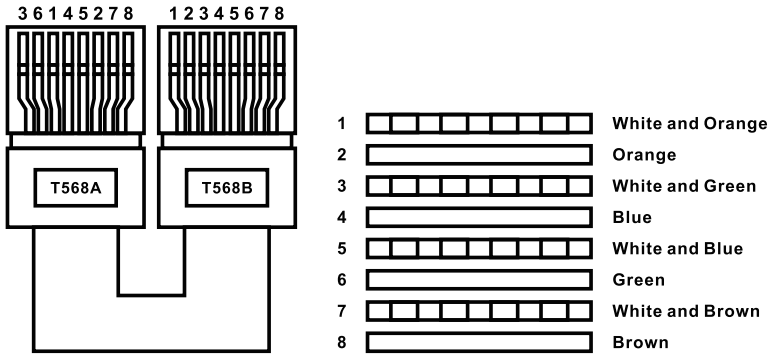

Cross interconnection method

I. Introduction

The cat5e/cat6 HDMI Extender is a tool which can extend your HDMI signal over 230fts/ 70meters to a compatible display. It is designed to convert HDMI signal to standard HD BaseT signal which can be transmitted by LAN cable. It also supports Transfer Bidirectional Infrared control signal together with the HDMI signal, so you can control the Source in the Sink side which is 230fts outside, also you can control the Sink in the Source side which is 230fts outside by using the HDMI Extender.

II. Features

☆ POC (Power Over Cable) function is supported, either TX or RX is powered by24V@1A power supply, the another does not need power supply from the DC jack. POC Power consumption is less than 10W.
※ See the description 1

☆ Use single UTP LAN cable (CAT-5E/6) to substitute HDMI cable to achieve long distance transmission.

☆ UTP termination follows the standard of direct interconnection method.

☆ Transmission distance: ※Over CAT6 cable
70 meters: 1080P @60Hz36bit; 3D1080P@30Hz36bit;
40 meters: 1080P @60Hz@48bit; 1080P @120Hz@24bit;
3D1080P@60Hz@36bit; 4K x 2K@30Hz@24bit.

☆ Support display resolutions up to 4K x 2K@30Hz
☆ Full HD support: 1080p@60Hz@48 bit/pixels, 1080p@120Hz@24 bit/pixels, 3D 1080P60Hz and 4K x 2K@30Hz@24bit
☆ Transfer Bidirectional Infrared control signal together with the HDMI signal.
※ See the description 2.
☆ Transfer Bidirectional RS232 control signal together with the HDMI signal.
※ See the description 3.

III. Package

1. HDMI Extender Transmitter ----------1PC
2. HDMI Extender Receiver ----------1PC
3. Wideband IR Tx ---------- 2PCS
4. Wideband IR Rx ----------2PCS
5. 24V1A DC Power Supply ----------1PC
6. Operation Manual ----------1PC
7. Mounting ears---------- 4PCS

IV. Specifications

Technical	
Frequency Bandwidth	297MHz[10.2Gbps]
Transmitter Input/Output	1x HDMI Female port/1xCAT6 1x IR Tx/1x IR Rx/1xPhoenix
Receiver Input/Output Ports	1xHDMI Female port/1xCAT6 1x IR Tx/1x IR Rx/1xPhoenix
Power Supply	DC 24V 1A
ESD Protection	Human Body Model: ± 8kV (air-gap discharge) ± 4kV (contact discharge)
Dimensions (mm)	65(W) X 115 (D) X 17 (H)
Weight	200g x 2
Operating Temperature	0°C ~ 40°C / 32°F ~ 104°F
Storage Temperature	-20°C ~ 60°C / -4°F ~ 140°F
Relative Humidity	20~90% RH (Non-condensing)
Power Consumption	20W (Max)

V. Operation controls and Functions

Transmitter

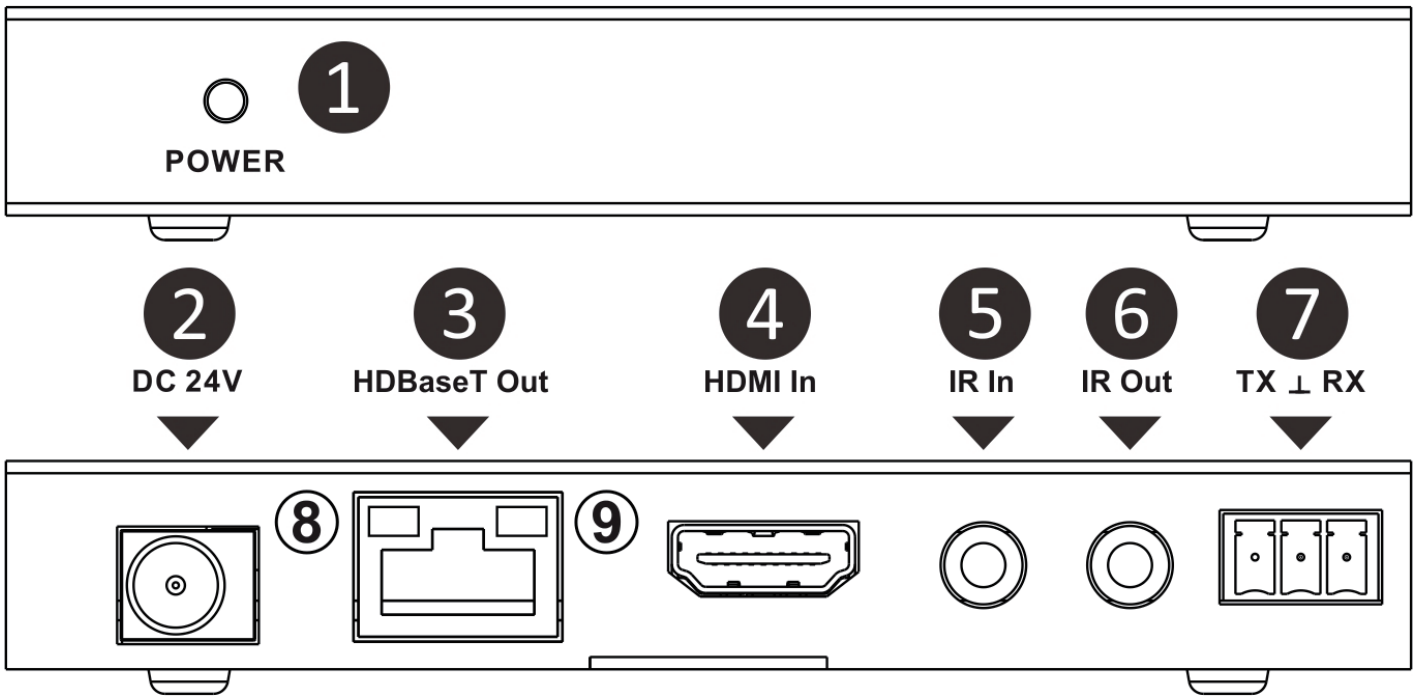

1. POWER: This LED illuminates when the device is connected with power supply.
2. DC 24V: Plug the 24V DC power supply into the unit.
3. HD BaseT OUT: Standard HD BaseT signal output port. Connect HD BaseT receiver with a UTP cable following the standard of direct interconnection method.

4. HDMI IN: HDMI input port. This slot is where you connect the HDMI source.
5. IR IN: Channel 2 IR Receiver. Connect with Wideband IR Rx.
6. IR OUT: Channel 1 IR Transmitter. Connect with Wideband IR Tx.
7. RS232: Phoenix jack provide Serial port control signal from receiver or to receiver.
8. Connection Signal Indicator Lamp
   ※Illuminate: The Transmitter and Receiver are in good connections status.
   ※Flashing: The Transmitter and Receiver are in poor connections status.
   ※Dark: The Transmitter and Receiver are not connected.
9. Data Signal Indicator Lamp
   ※Illuminate: The HDMI signal with HDCP.
   ※Flashing: The HDMI signal without HDCP.
   ※Dark: No HDMI signal.

Receiver

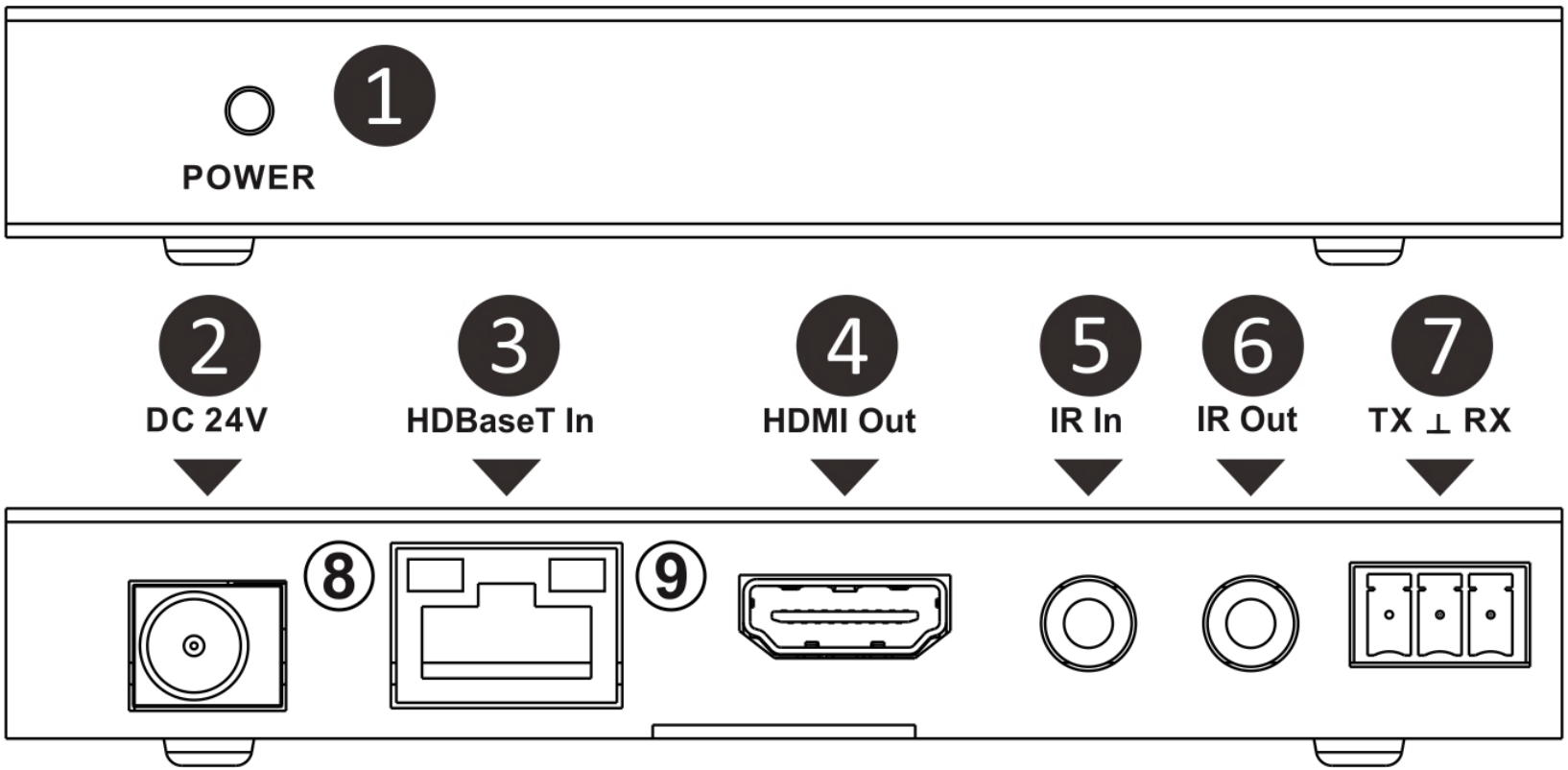

1. POWER: This LED illuminates when the device is connected with power supply
2. DC 24V: Plug the 24V DC power supply into the unit.
3. HD BaseT IN: Standard HD BaseT signal input port. Connect HD BaseT transmitter with a UTP cable following the standard of direct interconnection method.

4. HDMI OUT: HDMI output port. This slot is where you connect the HDTV or monitor with HDMI cable.
5. IR IN: Channel 1 IR Receiver. Connect with Wideband IR Rx.
6. IR OUT: Channel 2 IR Transmitter. Connect with Wideband IR Tx.
7. RS232: Phoenix jack provide Serial port control signal from receiver or to receiver.
8. Connection Signal Indicator Lamp
   ※Illuminate: The Transmitter and Receiver are in good connections status.
   ※Flashing: The Transmitter and Receiver are in poor connections status.
   ※Dark: The Transmitter and Receiver are not connected.
9. Data Signal Indicator Lamp
   ※Illuminate: The HDMI signal with HDCP.
   ※Flashing: The HDMI signal without HDCP.
   ※Dark: No HDMI signal.

※ Description 1

POC(Power Over Cable) Application Example

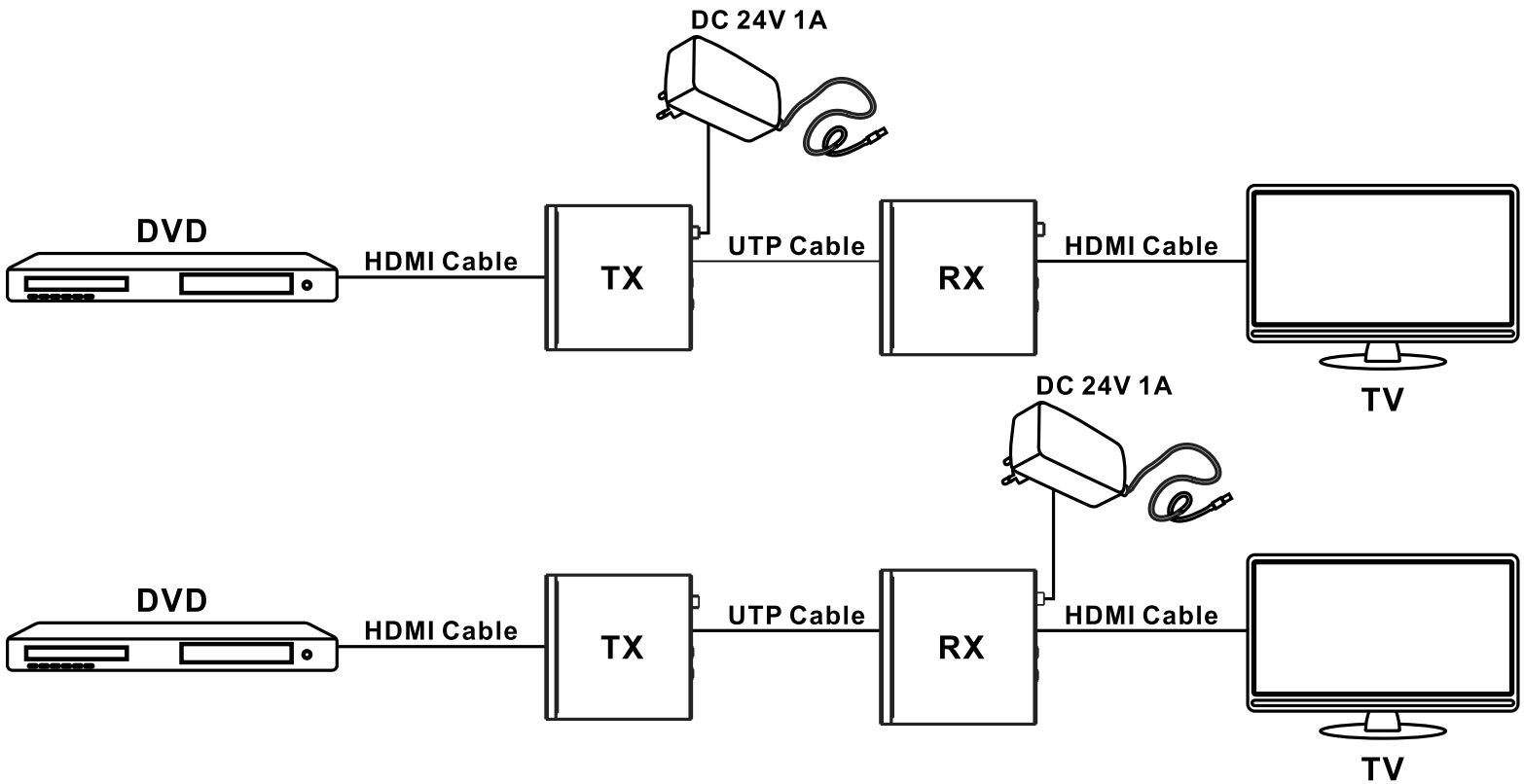

※ Description 2

Bidirectional Infrared control Application Example

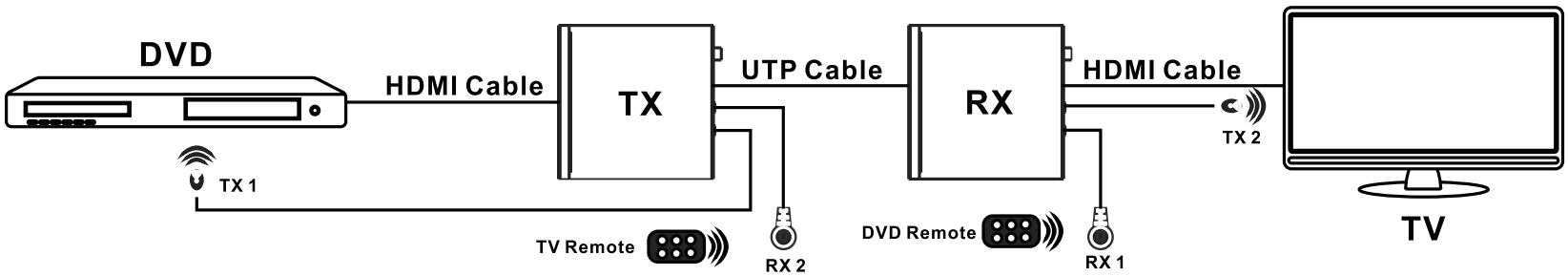

※ Description 3

Bidirectional RS232 control Application Example

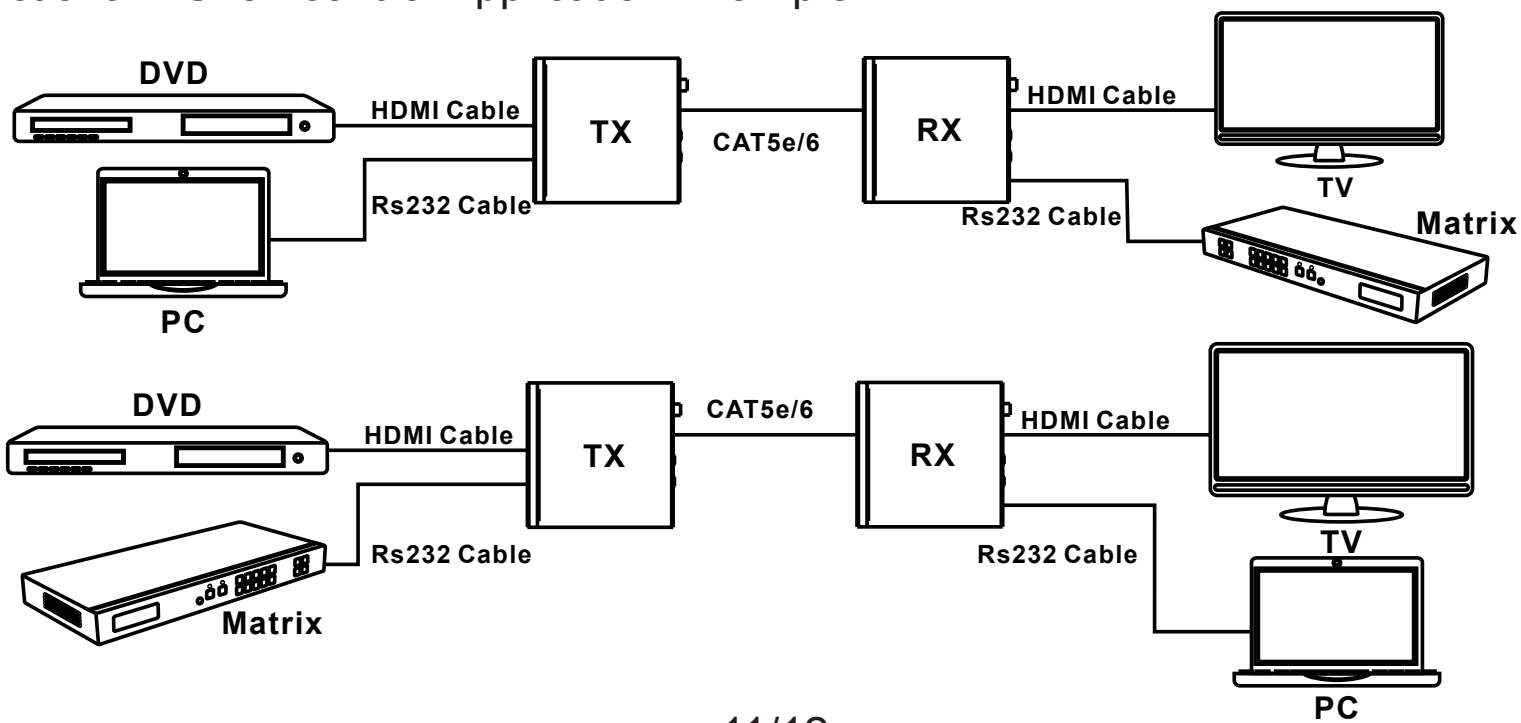

VI. Application Example

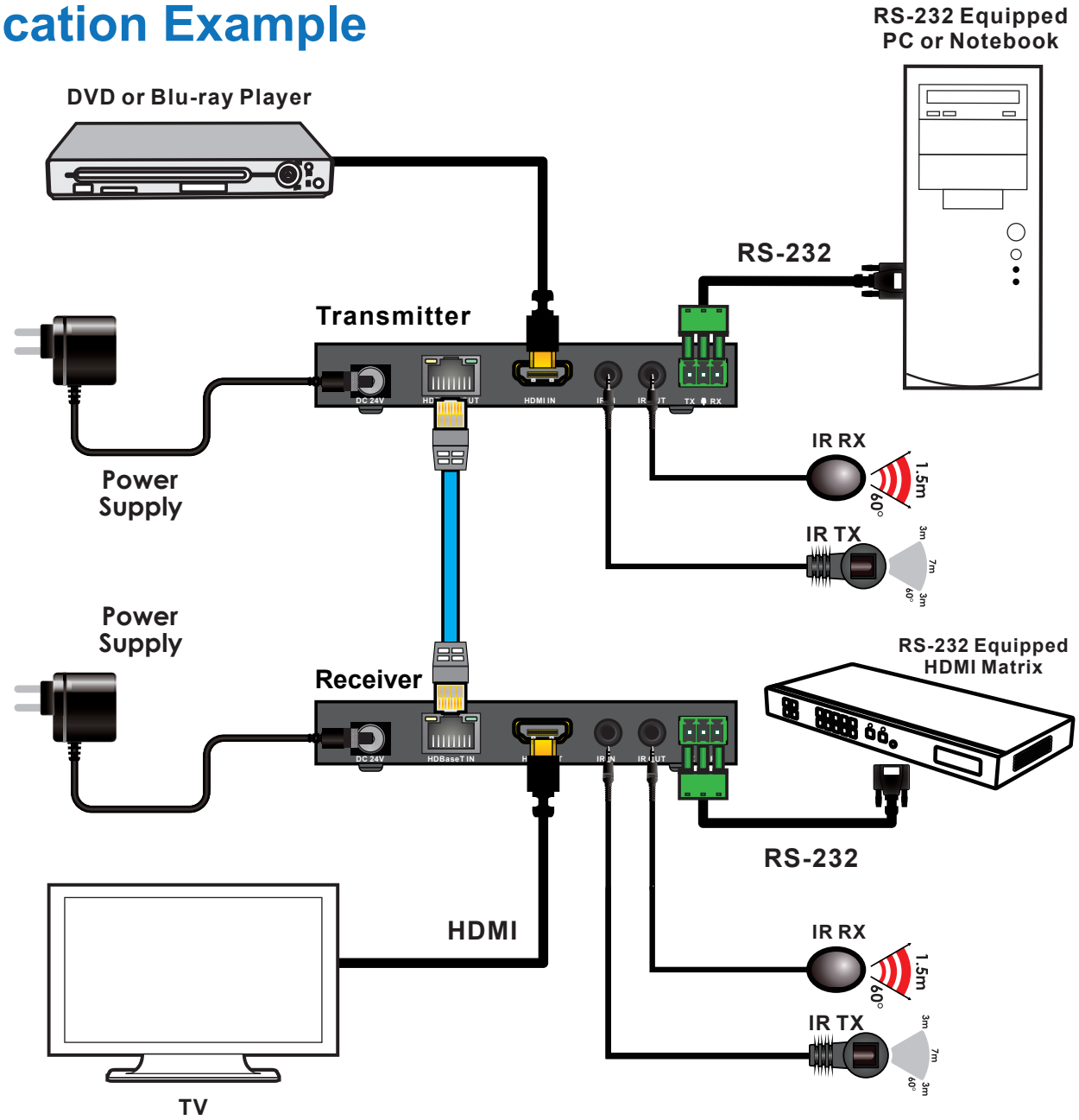

Quality Assurance

We have developed a strict quality assurance process and built a full-fledged testing laboratory. First-class high and low temperature laboratories, reliability and compatibility ensure that every product undergoes rigorous testing from design to delivery and is delivered free of defects.

After-sales service

We have established a complete after-sales warranty service system to respond to customer requirements in real time and quickly solve customer problems.

All trademarks are the property of their respective owners. ADERTECH is not responsible for any errors that may appear in this document publication. Product, pricing and feature information contained herein is subject to change without notice.

© 2023 ADERTECH Co Ltd.
The ADERTECH logo and associated visual identity are trademarks or registered trademarks of ADERTECH and/or its affiliates.