ADERTECH

H3BT-U8H-90EUA

8K HDMI & USB over HDBaseT 3.0 Extender



User Manual

VER 1.1

Thank you for purchasing this product

We have done everything possible to ensure that our equipment pleases our consumers. When solving any problems in the operation and connection ADERTECH equipment, it is best to contact authorized companies and specialists who work with our equipment. Our equipment is intended for professional use, so you have professional skills in using such equipment. ADERTECH is a manufacturer of a wide range of multimedia solutions.

Surge protection device recommended

This product contains sensitive electrical components that may be damaged by electrical spikes, surges, electric shock, lighting strikes, etc. Use of surge protection systems is highly recommended in order to protect and extend the life of your equipment.

Table of Contents

1. Introduction.....1
2. Features.....1
3. Package Contents.....2
4. Specifications.....2
5. Operation Controls and Functions.....4
   5.1 Transmitter Panel.....4
   5.2 Receiver Panel.....7
   5.3 USB Mode Applications.....10
   5.4 IR Pin Definition.....11
6. Application Example.....12

1. Introduction

This 8K HDMI & USB over HDBaseT Extender can extend uncompressed HD/UHD video and audio signals, eARC/ARC, RS-232, bi-directional IR, 1GbE Ethernet and USB2.0 signals up to 90m/295ft via a single CAT 6A/7 cable. Video resolution is up to 8K@30 4:4:4 10bit, 4K@120Hz 4:4:4 10bit, 4K60Hz 4:4:4. It supports eARC/ARC from RX's HDMI output pass-through to TX's HDMI input or de-embedding to TX's HDMI output port. Besides, it supports USB 2.0 signal transmission (Host/Device is configurable) and bi-directional POC function.
The Extender offers the most convenient solution for HDMI extension via a single CAT cable with long distance capability, and is the perfect solution for home/commercial application.

2. Features

☆ HDMI 2.1, HDCP 2.3 and HDBaseT 3.0 compliant
☆ Support up to 40Gbps FRL and 18Gbps TMDS video bandwidth
☆ Video resolution is up to 8K@30 4:4:4 10bit, 4K@120Hz 4:4:4 10bit
☆ Support all industry standard video resolutions including VGA-WUXGA and 480i-8K30
☆ VRR, FVA, ALLM support
☆ HDR, HDR10, HDR10+, Dolby Vision and HLG pass-through
☆ HDMI audio formats: Dolby Atmos, Dolby TrueHD, Dolby Digital Plus and DTS-HD Master Audio
☆ Signal transmission distance can be extended up to 90m/295ft via a single CAT 6A/7 cable
☆ Support eARC/ARC from RX to TX sound system
☆ Advanced EDID management through EDID DIP switch
☆ With CONFIG DIP switch, allowing the RS-232 serial port to feature different functions
☆ Support USB2.0 transmission (with speeds up to 350Mbps), Host/Device is configurable
☆ Bi-directional Ethernet (1Gb), analog audio, IR & RS-232 signal pass-through
☆ HDMI re-clocking on the HDBaseT™ Receiver to help solve HDMI HDCP, compatibility and handshaking issues
☆ Bi-directional 24V POC function

3. Package Contents

① 1 x HDBaseT Extender (Transmitter)
② 1 x HDBaseT Extender (Receiver)
③ 1 x IR Blaster Cable (1.5 meters)
④ 1 x IR Wideband Receiver Cable (1.5 meters)
⑤ 2 x 3pin-3.81mm Phoenix Connectors
⑥ 4 x Mounting Ears
⑦ 8 x Machine Screws (KM3*4)
⑧ 8 x Rubber Feet
⑨ 1 x 24V/2.7A Locking Power Supply
⑩ 1 x User Manual

4. Specifications

Technical	
HDMI Compliance	HDMI 2.1
HDCP Compliance	HDCP 2.3
Video Bandwidth	Up to 40Gbps FRL and 18Gbps TMDS
Video Resolution	Up to 8K@30 4:4:4 10bit, 4K@120Hz 4:4:4 10bit
USB Bandwidth	Up to 350Mbps
HDR	HDR, HDR10, HDR10+, Dolby Vision, HLG
Color Space	RGB 4:4:4, YCbCr 4:4:4 / 4:2:2, YCbCr 4:2:0
Color Depth	8/10/12-bit
Audio Formats	**HDMI:** PCM2.0, LPCM5.1, LPCM7.1, (32K/44.1K/48K/88.2K/96K/176.4K/192K)(16/20/24); Dolby Digital, Dolby Digital plus, Dolby TrueHD, Dolby Atmos; DTS Surround, 96/24, ES, DTS Express, DTS-HD HRA, DTS HD Master, DTS:X **Analog:** PCM 2.0 48K
IR Level	5Vp-p/12Vp-p
IR Bandwidth	20K - 60KHz
Transmission Distance	MAX: CAT 6 -- 60m/197ft CAT 6A/7 -- 90m/295ft
ESD Protection	Human body model — ±8kV (Air-gap discharge) & ±4kV (Contact discharge)

Connection	
Transmitter	Input: 1 x HDMI IN [Type A, 19-pin female] 1 x AUDIO IN [3.5mm Stereo Mini-jack] Output: 1 x HDMI OUT [Type A, 19-pin female] 1 x HDBT OUT [RJ45, 8-pin female] 1 x AUDIO OUT [3.5mm Stereo Mini-jack] Control: 1 x IR IN [3.5mm Stereo Mini-jack] 1 x IR OUT [3.5mm Stereo Mini-jack] 1 x RS-232 [3pin-3.81mm Phoenix jack] 1 x USB HOST [USB Type B] 3 x USB DEVICE [USB Type A] 1 x ETHERNET [RJ45]
Receiver	Input: 1 x HDMI IN [Type A, 19-pin female] 1 x HDBT IN [RJ45, 8-pin female] 1 x AUDIO IN [3.5mm Stereo Mini-jack] Output: 1 x HDMI OUT [Type A, 19-pin female] 1 x AUDIO OUT [3.5mm Stereo Mini-jack] Control: 1 x IR IN [3.5mm Stereo Mini-jack] 1 x IR OUT [3.5mm Stereo Mini-jack] 1 x RS-232 [3pin-3.81mm Phoenix jack] 1 x USB HOST [USB Type B] 3 x USB DEVICE [USB Type A] 1 x ETHERNET [RJ45]
Mechanical	
Housing	Front Panel — Aluminium Enclosure; Case — Metal Enclosure
Color	Black
Dimensions	Transmitter / Receiver: 200mm [W] x 100mm [D] x 30mm [H]
Weight	Transmitter: 571g, Receiver: 571g
Power Supply	Input: AC 100 - 240V 50/60Hz Output: DC 24V/2.7A (US/EU standard, CE/FCC/UL certified)
Power Consumption	Total power consumption: 20.4W (POC) TX/RX full load: 9.36W/9.84W; TX/RX no-load: 2.46W/3.36W
Operating Temperature	32 - 104°F / 0 - 40°C
Storage Temperature	-4 - 140°F / -20 - 60°C
Relative Humidity	20 - 90% RH (no condensation)

Resolution / Cable Length	**8K30 - Feet / Meters**	**4K60 - Feet / Meters**	**4K24 - Feet / Meters**	**1080P60 - Feet / Meters**
HDMI IN / OUT	9.8ft / 3m	16ft / 5m	32ft / 10m	66ft / 20m

The use of “Premium High Speed HDMI” cable is highly recommended.

5. Operation Controls and Functions

5.1 Transmitter Panel

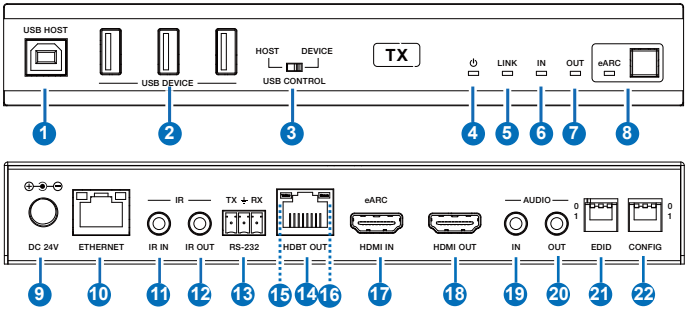

No.	Name	Function Description
1	USB HOST	USB Host port, connected to PC.
2	USB DEVICE	Three USB extension ports, connected to U disk, mouse or keyboard.
3	HOST/ DEVICE USB CONTROL switch	Switch to left (HOST), the USB HOST mode is enabled; Switch to right (DEVICE), the USB DEVICE mode is enabled. *Note: If the transmitter is set to USB HOST mode, the receiver must be set to USB DEVICE mode.*
4	Power LED	▪ Light on: The transmitter is powered on. ▪ Light off: The transmitter is powered off.
5	LINK LED	▪ Light on: Transmitter and receiver are in good connection status. ▪ Light flashing: Transmitter and receiver are in poor connection status or connected to the same device. ▪ Light off: Transmitter and receiver are not connected.
6	IN LED	Video signal input indicator. ▪ Light on: There is HDMI signal input. ▪ Light off: There is no HDMI input or the system is powered off.
7	OUT LED	Video signal output indicator. ▪ Light on: There is HDMI signal output. ▪ Light off: There is no HDMI output or the system is powered off.

No.	Name	Function Description
8	eARC LED & button	Press the eARC button to enable/disable the eARC/ARC function, and the eARC LED will indicate the status as following. ▪ Light on: The eARC/ARC mode is enabled, and the device is working normally. ▪ Light flashing: The eARC/ARC mode is enabled, but the device is working abnormally. ▪ Light off: The eARC/ARC mode is disabled.
9	DC 24V	DC 24V/2.7A power supply input port. *Note that the extender supports POC function, it means that either transmitter or receiver is powered on by 24V/2.7A power adapter, the other one doesn't need power supply.*
10	ETHERNET port & indicators	Ethernet port with adaptive broadband rate. For example, if the transmitter is connected to a PC with a 100M rate, and the receiver is connected to a Gigabit router, the device can automatically switch the 100M rate of the transmitter to Gigabit rate. *(Note: If the connected device only supports 100M rate, the extender cannot switch to Gigabit rate.)* Ethernet Indicators: ▪ Light in green: the Ethernet rate is 1000 Mbit/s. ▪ Light in yellow: the Ethernet rate is 100 Mbit/s.
11	IR IN port	IR signal input port, connected to IR Receiver cable.
12	IR OUT port	IR signal output port, connected to IR Blaster cable.
13	RS-232 port	The RS-232 serial port features different functions through the setting of the CONFIG DIP switch: (1) RS-232 signal pass-through (2) Control & FW upgrade (3) VS3000 FW upgrade (4) Dubug
14	HDBT OUT port	HDBaseT Network port, connected to the HDBT IN port of the receiver with a CAT 6A/7 cable. It is used for various signals pass-through.
15	Data Signal Indicator (Yellow)	▪ Light on: HDMI signal with HDCP. ▪ Light flashing: HDMI signal without HDCP. ▪ Light off: No HDMI signal.
16	Link Signal Indicator (Green)	▪ Light on: Transmitter and receiver are in good connection status. ▪ Light flashing: Transmitter and receiver are in poor connection status or connected to the same device. ▪ Light off: Transmitter and receiver are not connected.

No.	Name	Function Description
17	eARC/HDMI IN port	This port features two functions: (1) HDMI signal input port, connected to HDMI source device; (2) eARC/ARC audio port, connected to eARC/ARC amplifier.
18	HDMI OUT port	HDMI video signal output port. It can loop out the local video signal or output the video signal returned from the receiver.
19	AUDIO IN port	Analog audio input port. The audio from this port can be output through the AUDIO OUT port of the receiver.
20	AUDIO OUT port	Analog audio output port. It can output the audio from the AUDIO IN port of the receiver.
21	EDID DIP switch	The DIP switch is used for EDID setting. (Set to 000 by default.) [DIP]=000: Copy RX HDMI OUT port sink EDID *(Note: If there is no TV connected to the receiver, it will copy the EDID of the local loopout video.)* [DIP]=001: HDMI 1080p@60Hz, Audio 2ch PCM [DIP]=010: HDMI 4K@60Hz 4:4:4, Audio 2ch PCM [DIP]=011: HDMI 4K@60Hz 4:4:4, Audio 5.1ch PCM/DTS/DOLBY [DIP]=100: HDMI 4K@60Hz 4:4:4, Audio 7.1ch PCM/DTS/DOLBY/HD [DIP]=101: HDMI 8K@30Hz 4:4:4+4K@120Hz 4:4:4, Audio 2ch PCM [DIP]=110: HDMI 8K@30Hz 4:4:4+4K@120Hz 4:4:4, Audio 5.1ch PCM/DTS/DOLBY [DIP]=111: HDMI 8K@30Hz 4:4:4+4K@120Hz 4:4:4, Audio 7.1ch PCM/DTS/DOLBY/HD
22	CONFIG DIP switch	The DIP switch is used to set IR level and serial port access. DIP SW1=0: The IR level is set to 12V. DIP SW1=1: The IR level is set to 5V. DIP SW2/SW3=00: The RS-232 port is used for RS-232 signal pass-through. DIP SW2/SW3=01: The RS-232 port is used for Control & FW upgrade. DIP SW2/SW3=10: The RS-232 port is used for VS3000 FW upgrade. DIP SW2/SW3=11: The RS-232 port is used for dubuging.

5.2 Receiver Panel

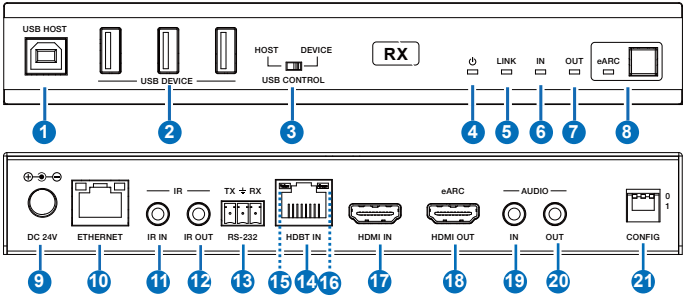

No.	Name	Function Description
1	USB HOST	USB Host port, connected to PC.
2	USB DEVICE	Three USB extension ports, connected to U disk, mouse or keyboard.
3	HOST/ DEVICE USB CONTROL switch	Switch to left (HOST), the USB HOST mode is enabled; Switch to right (DEVICE), the USB DEVICE mode is enabled. *Note: If the transmitter is set to USB HOST mode, the receiver must be set to USB DEVICE mode.*
4	Power LED	▪ Light on: The receiver is powered on. ▪ Light off: The receiver is powered off.
5	LINK LED	▪ Light on: Transmitter and receiver are in good connection status. ▪ Light flashing: Transmitter and receiver are in in poor connection status or connected to the same device. ▪ Light off: Transmitter and receiver are not connected.
6	IN LED	Video signal input indicator. ▪ Light on: There is HDMI signal input. ▪ Light off: There is no HDMI input or the system is powered off.
7	OUT LED	Video signal output indicator. ▪ Light on: There is HDMI signal output. ▪ Light off: There is no HDMI output or the system is powered off.

No.	Name	Function Description
8	eARC LED & button	Press the eARC button to enable/disable the eARC/ARC function, and the eARC LED will indicate the status as following. ▪ Light on: The eARC/ARC mode is enabled, and the device is working normally. ▪ Light flashing: The eARC/ARC mode is enabled, but the device is working abnormally. ▪ Light off: The eARC/ARC mode is disabled.
9	DC 24V	DC 24V/2.7A power supply input port. *Note that the extender supports POC function, it means that either transmitter or receiver is powered on by 24V/2.7A power adapter, the other one doesn't need power supply.*
10	ETHERNET port & indicators	Ethernet port with adaptive broadband rate. For example, if the transmitter is connected to a PC with a 100M rate, and the receiver is connected to a Gigabit router, the device can automatically switch the 100M rate of the transmitter to Gigabit rate. *(Note: If the connected device only supports 100M rate, the extender cannot switch to Gigabit rate.)* Ethernet Indicators: ▪ Light in green: the Ethernet rate is 1000 Mbit/s. ▪ Light in yellow: the Ethernet rate is 100 Mbit/s.
11	IR IN port	IR signal input port, connected to IR Receiver cable.
12	IR OUT port	IR signal output port, connected to IR Blaster cable.
13	RS-232 port	The RS-232 serial port features different functions through the setting of the CONFIG DIP switch: (1) RS-232 signal pass-through (2) Control & FW upgrade (3) VS3000 FW upgrade (4) Dubug
14	HDBT IN port	HDBaseT Network port, connected to the HDBT OUT port of the transmitter with a CAT 6A/7 cable. It is used for various signals pass-through.
15	Data Signal Indicator (Yellow)	▪ Light on: HDMI signal with HDCP. ▪ Light flashing: HDMI signal without HDCP. ▪ Light off: No HDMI signal.
16	Link Signal Indicator (Green)	▪ Light on: Transmitter and receiver are in good connection status. ▪ Light flashing: Transmitter and receiver are in poor connection status or connected to the same device. ▪ Light off: Transmitter and receiver are not connected.

No.	Name	Function Description
17	HDMI IN port	HDMI signal input port, connected to HDMI source device. It can transmit video with resolution of 1080P 24Hz in reverse to the HDMI OUT port of the transmitter. *Note: It is a reserved port, being closed by default. Before using this port, you need to turn on it through command control, and make sure that the eARC function is disabled.*
18	eARC/HDMI OUT port	This port features two functions: (1) HDMI signal output port, connected to HDMI display device; (2) eARC/ARC audio port, connected to TV with eARC/ARC function.
19	AUDIO IN port	Analog audio input port. The audio from this port can be output through the AUDIO OUT port of the transmitter.
20	AUDIO OUT port	Analog audio output port. It can output the audio from the AUDIO IN port of the transmitter.
21	CONFIG DIP switch	The DIP switch is used to set IR level and serial port access. DIP SW1=0: The IR level is set to 12V. DIP SW1=1: The IR level is set to 5V. DIP SW2/SW3=00: The RS-232 port is used for RS-232 signal pass-through. DIP SW2/SW3=01: The RS-232 port is used for Control & FW upgrade. DIP SW2/SW3=10: The RS-232 port is used for VS3000 FW upgrade. DIP SW2/SW3=11: The RS-232 port is used for dubuging.

5.3 USB Mode Applications

The Extender supports USB2.0 transmission, and Host/Device is configurable.

Mode 1: USB forward from TX to RX

Switch the HOST/DEVICE USB CONTROL switch to left, then power off and reboot the transmitter to set to USB Host mode. Meanwhile, switch the HOST/DEVICE USB CONTROL switch to right, then power off and reboot the receiver to set to USB Device mode.

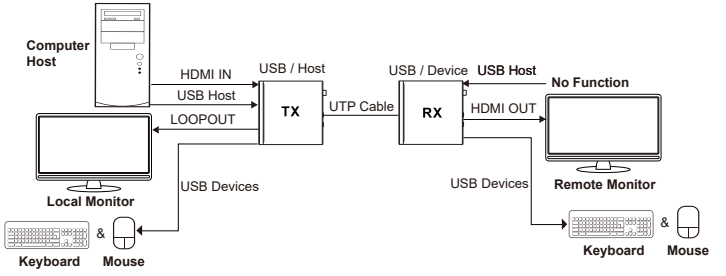

Mode 2: USB reverse from RX to TX

Switch the HOST/DEVICE USB CONTROL switch to right, then power off and reboot the transmitter to set to USB Device mode. Meanwhile, switch the HOST/DEVICE USB CONTROL switch to left, then power off and reboot the receiver to set to USB Host mode.

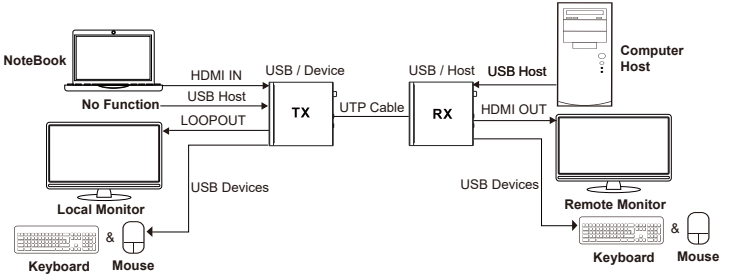

5.4 IR Pin Definition

IR Receiver and Blaster pin's definition as below:

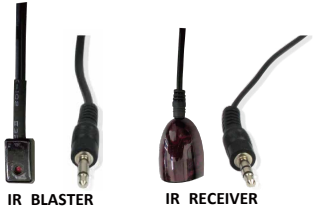

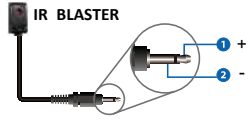

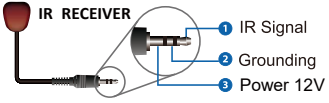

Note: When the angle between the IR receiver and the remote control is ± 45 °, the transmission distance is 0-5 meters; when the angle between the IR receiver and the remote control is ± 90 °, the transmission distance is 0-8 meters.

6. Application Example

Mode 1: eARC/ARC Application

The Audio Return Channel (ARC) in HDMI 2.1 enables a TV, via a single HDMI cable or audio cable, to send audio data “upstream” to an A/V receiver, the extender will continue the upstream audio all the way to the transmitter. There it can be connected via HDMI ARC.

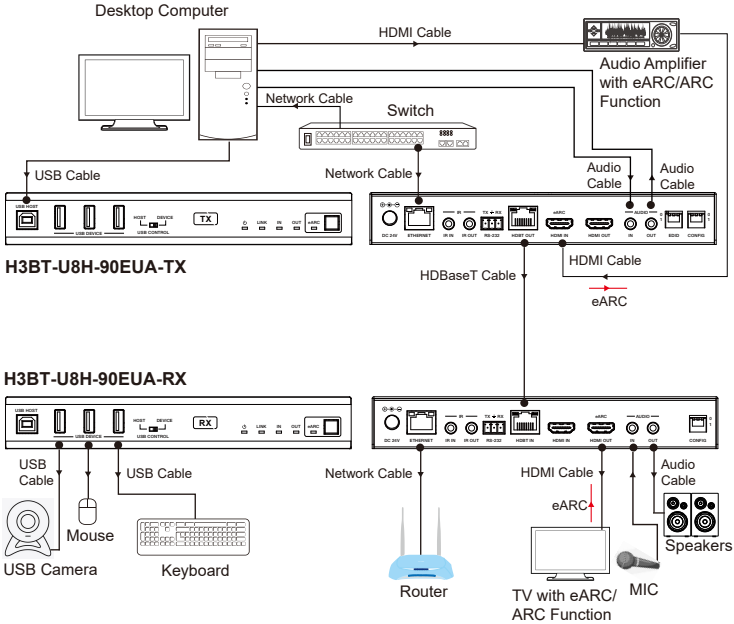

Note: Please press the eARC buttons on the front panel of the transmitter and receiver to enable the eARC/ARC function before operating the system.

Mode 2: Ordinary Connection Application

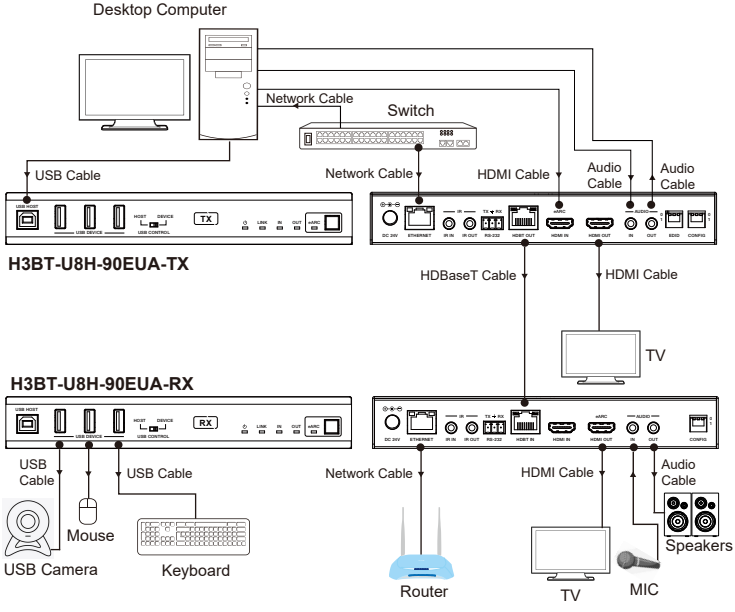

Note: Please press the eARC buttons on the front panel of the transmitter and receiver to disable the eARC/ARC function before operating the system.

All trademarks are the property of their respective owners. ADERTECH is not responsible for any errors that may appear in this document.publication. Product, pricing and feature information contained herein is subject to change without notice.

© 2023 ADERTECH Co Ltd. The ADERTECH logo and associated visual identity are trademarks or registered trademarks of ADERTECH and/or its affiliates