ADERTECH
CL-U8H-18



48Gbps UHD 1:8 HDMI Splitter User Manual Version 1.1

Thank you for purchasing this product

We have done everything possible to ensure that our equipment pleases our consumers. When solving any problems in the operation and connection ADERTECH equipment, it is best to contact authorized companies and specialists who work with our equipment. Our equipment is intended for professional use, so you have professional skills in using such equipment. ADERTECH is a manufacturer of a wide range of multimedia solutions.

Surge protection device recommended

This product contains sensitive electrical components that may be damaged by electrical spikes, surges, electric shock, lighting strikes, etc. Use of surge protection systems is highly recommended in order to protect and extend the life of your equipment.

Table of Contents

1. Introduction..... 1
2. Features..... 1
3. Package Contents..... 1
4. Specifications..... 2
5. Operation Controls and Functions..... 3
6. Auto Downscaling & Auto Converting..... 4
7. Application Example..... 6

1. Introduction

This 1:8 splitter is an advanced solution for splitting single HDMI signal to 8 HDMI outputs synchronously, with video resolution up to 8K@60 4:2:0 12bit. It supports data rates up to 48Gbps, complying with HDMI 2.1 and HDCP 2.3 requirements. It includes several features for ease of integration, including EDID management, cable equalization. This multi-functional product can work well with xbox or PS5 to achieve 4K@ 120Hz on your TVs or relative monitors.

2. Features

☆ HDCP 2.3 compliant
☆ Support 48Gbps FRL and 18Gbps TMDS video bandwidth
☆ Support resolution up to 8K@60Hz 4:2:0 12bit, 4K@120Hz 4:4:4 12bit, as specified in HDMI 2.1
☆ Support VRR, ALLM, QMS, QFT, SBTM, as specified in HDMI 2.1
☆ Support HDR, HDR10, HDR10+, Dolby Vision, HLG pass-through
☆ Support HDMI audio formats: LPCM 7.1CH, Dolby TrueHD, Atmos, DTS-HD Master Audio
☆ Support resolution auto downscaling on each output
☆ Support auto converting of HDR to SDR on each output
☆ Advanced EDID management

3. Package Contents

- 1 × 48Gbps 1:8 Splitter
- 1 × 12V/2.5A Multinational Locking Power Supply
- 2 × Mounting Ear
- 4 × Machine Screw (KM3*6)
- 1 × User Manual

4. Specifications

Technical	
HDMI Compliance	HDMI 2.1
HDCP Compliance	HDCP 2.3, HDCP 1.4
Video Bandwidth	48Gbps FRL and 18Gbps TMDS
Video Resolution	Up to 8K@60Hz 4:2:0 12-bit, 4K@120Hz 4:4:4 12-bit
Color Depth	8/10/12-bit
Color Space	RGB, YCbCr 4:4:4 / 4:2:2 / 4:2:0
HDR	HDR, HDR10, HDR10+, Dolby Vision, HLG
Audio Formats	HDMI IN/OUT: LPCM, Dolby Digital/Plus/EX, Dolby True HD, Dolby Atmos, DTS, DTS-EX, DTS-96/24, DTS High Res, DTS-HD Master Audio, DSD
ESD Protection	IEC 61000-4-2: ±8kV (Air-gap discharge) & ±4kV (Contact discharge)
Connection	
Input	1 × IN [HDMI Type A, 19-pin female]
Output	8 × OUT [HDMI Type A, 19-pin female]
Control	1 × SERVICE [USB Type C, Update port]
Mechanical	
Housing	Metal Enclosure
Color	Black
Dimensions	250mm [W] × 104mm [D] × 30mm [H]
Weight	743g
Power Supply	DC 12V/2.5A
Power Consumption	12.2W (Max)
Operation Temperature	0°C ~ 40°C / 32°F ~ 104°F
Storage Temperature	-20°C ~ 60°C / -4°F ~ 140°F
Relative Humidity	20~90% RH (Non-condensing)

Recommended HDMI Cable				
Video Resolution	8K	4K60	4K24	1080P
HDMI Cable Length (HDMI IN / OUT)	3m/10ft (Ultra HDMI 2.1)	8m/26ft	12m/39ft	15m/49ft
The use of "Premium High Speed HDMI" cable is highly recommended.				

5. Operation Controls and Functions

Front Panel

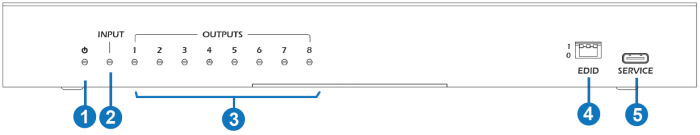

Rear Panel

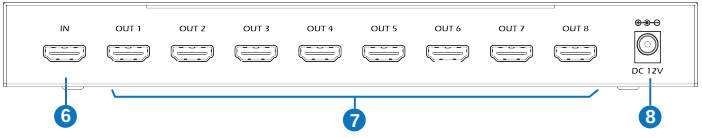

No.	Name	Function Description
1	POWER LED	When the device is powered on, the red LED will be on.
2	IN LED	When the HDMI IN port connects to an active source device, the green LED will be on.
3	OUT LED (1~8)	When the HDMI OUT 1/2/3/4/5/6/7/8 port connects to a display device and outputs signal, the corresponding green LED will be on.
4	EDID DIP switch	Use the DIP switch to set EDID. [DIP]=111: Copy OUT port sink EDID (as factory default) [DIP]=110: 4K60(4:4:4), 2.0CH [DIP]=101: FRL12G_8K_HDR, 2.0CH [DIP]=100: FRL12G_8K_HDR, 5.1CH [DIP]=011: FRL12G_8K_HDR, 7.1CH [DIP]=010: FRL10G_8K_HDR, 2.0CH [DIP]=001: FRL10G_8K_HDR, 5.1CH [DIP]=000: FRL10G_8K_HDR, 7.1CH
5	SERVICE	Firmware update port.
6	IN port	HDMI signal input port, connecting to HDMI source device such as DVD or PS5 with an HDMI cable.
7	OUT port (1~8)	HDMI signal output port, connecting to HDMI display device such as TV or Monitor with an HDMI cable.
8	DC 12V	12V/2.5A power input port.

6. Auto Downscaling & Auto Converting

This 48Gbps 1x8 Splitter supports auto downscaling and auto converting on all outputs. It will automatically output the proper HDMI signal according to the EDID of the display device. Before downscaling it will compare all the EDID of the connected display devices and select the minimum resolution to downscale and output.

For example:

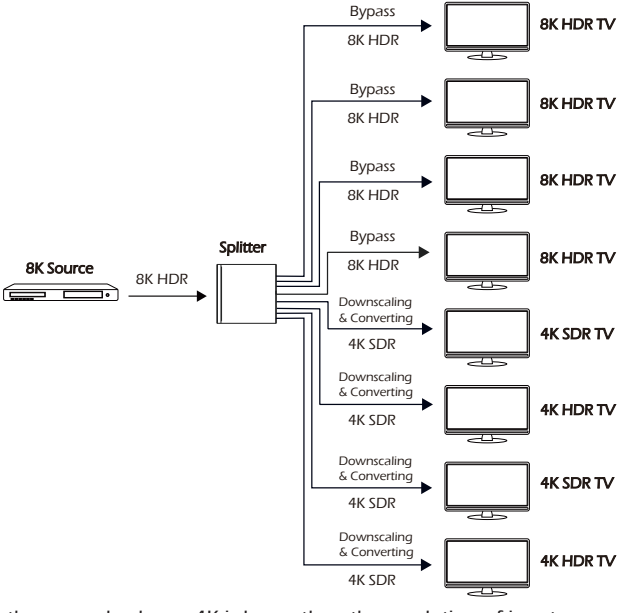

In the example above, 4K is lower than the resolution of input source, so it will downscale and output according to the the minimum resolution of 4K SDR.

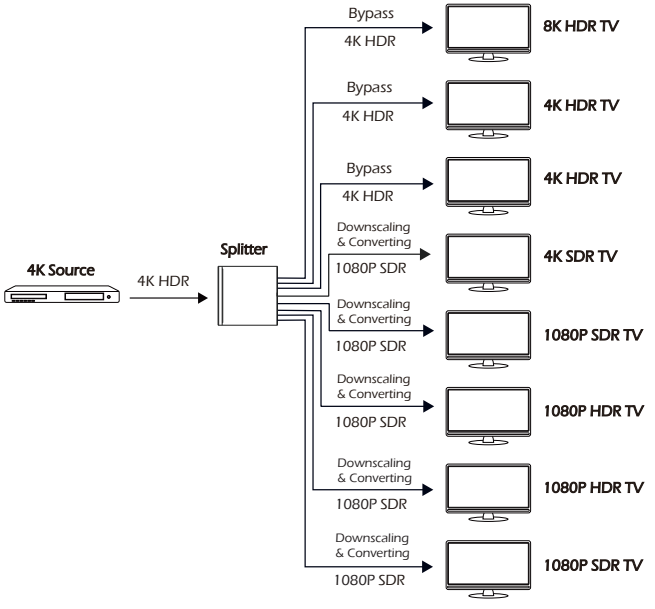

In the example above, 1080P is lower than the resolution of input source, so it will downscale and output according to the the minimum resolution of 1080P SDR.

NOTE: If the source resolution is downscaled and converted to 1080P DVI according to the EDID of display devices, it will be output without sound on TV.

Downscaling will not work in the following conditions:

1. The input source is 8K DSC format.
2. The resolution of input source is not supported by the splitter.

7. Application Example

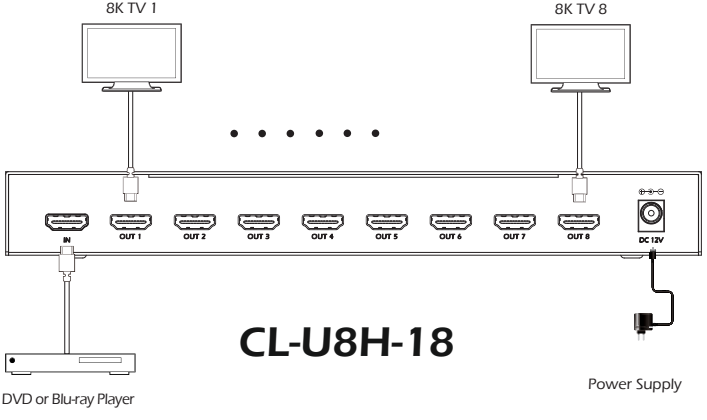

All trademarks are the property of their respective owners. ADERTECH is not responsible for any errors that may appear in this document publication. Product, pricing and feature information contained herein is subject to change without notice.
© 2023 ADERTECH Co Ltd.
The ADERTECH logo and associated visual identity are trademarks or registered trademarks of ADERTECH and/or its affiliates.