adertech

EXT-UB2-TR



USB 2.0
CAT Extender up to 100 meters

Table of Contents

1. Introduction 3

2. Features 3

3. Package Contents 3

4. Warranty Information 4

5. Unit's interfaces 5
   5.1 Transmitter Unit 5
   5.2 Receiver Unit 5
   5.3 Link Interface 5

6. Best Practice 6

7. Safety Instructions 6

8. Specifications 7

9. Connection Scheme Example 8

All trademarks are the property of their respective owners. ADERTECH is not responsible for any errors that may appear in this document.publication. Product, pricing and feature information contained herein is subject to change without notice.

© 2023 ADERTECH Co Ltd. The ADERTECH logo and associated visual identity are trademarks or registered trademarks of ADERTECH and/or its affiliates

1. Introduction

EXT-UB2-TR – is a USB2.0 extender over CAT cable. System supports point-to-point extension with bidirectional transmission between USB host and peripheral devices. It is seriously expand extension range and signal protection comparing to ordinary USB cables or passive extenders. Transmitter unit is equipped with USB input port for Host Device (PC) connection, while Receiver unit has 2x ports USB2.0 hub for connecting peripheral devices. Extender based on the wide spread and good known Valens VA6000 Series Chipset which is ideal for infotainment systems and extension of USB peripherals, the VA6000 Series supports the convergence and extension of symmetric high bandwidth interfaces over the simplest infrastructure. Extender offers long-range extension of USB peripherals. Transmitter and Receiver units housed in compact and robust metal cases for protecting and cooling the system components. Units could be powered by the external power supply or over CAT cable.

2. Features

- USB2.0 Compliant
- Up to 200Mbs extension bandwidth
- 100 meters extension over single CAT5e or CAT6 cable
- Units are housed in compact cases
- Link and Data status indicators

3. Package Contents

1× EXT-UB2–TX Transmitter Unit
1× EXT-UB2-RX Receiver Unit
1× USB cable (A-B)
1× Power Supply 12V, 1A
1× User Manual

4. Warranty Information

Aberman warrants all units to be free from defects in workmanship and materials, under normal use and service, for a period of one (1) year from the date of purchasing from authorized reseller.
If a product does not work as it warranted during this period, Aberman will repair or replace the defective product or its part. Replacement products may be new or reconditioned.

Warranty ends if the product has been damaged due to abuse, misuse, neglect, accident, unusual physical or electrical stress, unauthorized modifications, tampering, alterations, or servicing other than by Aberman or its authorized centers, causes other than from ordinary use or failure to properly use the Product in the application for which said Product is intended.

5. Unit's interfaces

5.1 Transmitter Unit

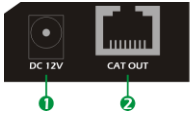

N	Type	Description
1	Power Socket	DC Power Connector, 12V, 1A – connect Power Supply
2	RJ45 Socket	Link Output Interface – connect CAT cable to Receiver
3	USB B Socket	USB 2.0 Interface – connect to USB Host (PC)
4	LED Green	Power Indicator, active when power is applied to the unit

5.2 Receiver Unit

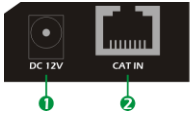

N	Type	Description
1	Power Socket	DC Power Connector, 12V, 1A – connect Power Supply
2	RJ45 Socket	Link Input Interface – connect CAT cable to Receiver
3	USB A Socket	USB 2.0 Interface Port 1 – connect to USB Peripheral
4	LED Green	Power Indicator, active when power is applied to the unit
5	USB A Socket	USB 2.0 Interface Port 2 – connect to USB Peripheral

5.3 Link Interface

The system built on Valens VA6000 Series Chipset which is ideal for infotainment systems and extension of USB peripherals up to 100 m.

The PoC technology enables powering over CAT cable feature. This means that only one external power supply has to be connected to Transmitter or Receiver Unit, while other unit will be powered over the CAT cable. We recommend connecting the power supply to Receiver unit when using USB peripheral device with heavy power demands like a hard drives and etc. Do not connect any PoC incompatible units to RJ45 ports - it can seriously damage equipment.

6. Best Practice

ADERTECH engineers design products at the highest quality standards. To get the best results from our products, please read this manual carefully. We recommend using the best quality connectors, cables, and adapters. Consider the points below when you choose accessories and position equipment.

For best results with HDMI/DVI, use good quality cables up to 5 meters long for 4K and up to 15 meters for 1080p, or shorter if you are using any connection adapters. If you need to place your equipment more than 15 meters apart, we recommend using a signal extender. See Aberman Smart Extension product line of signal extenders to find correct one. Use only graded Speed HDMI cables.

In industrial environments, use shielded CAT cables (STP, FTP, F/UTP or S/FTP) with digital extenders. To achieve best performance and maximum distance use appropriate fiber optical types (Multi or Single Mode) and grades for optical extenders.

7. Safety Instructions

WARNING: To reduce the risk of fire or electric shock, do not expose this device to rain or moisture. Do not use this device near water. Clean only with a dry cloth.

Protect the power cord from being walked on or pinched particularly at plugs, convenience receptacles, and the point where they exit from the device. This unit must be connected to an earthed mains socket outlet with the supplied cable. The AC wall outlet should be installed near to the unit and be easily accessible.

If using extenders which run a long distance, the protective earth circuit of the socket should be verified by a skilled person to ensure equipotential earth bonding. Do not use unit on objects or installations where power lines have grounding and/or different phase issues. Unplug units during lightning storms or when unused for long periods of time. Do not install unit near any heat sources such as radiators, heat registers, stoves, or devices (including amplifiers) that produce heat. Do not block any ventilation openings. This unit uses active cooling with fans. Do not install unit in dusty and/or dirty places. Use professional equipment racks with air condition and filters.

8. Specifications

SKU	EXT-UB2-TR
Type	USB over CAT Extender
USB Compliance	USB 2.0
HDCP Compliance	HDCP1.4/2.2
Link Bandwidth	Up to 200Mbps
Chipset Compliance	Valens VA6000, PoC
Transmission Distance	up to 100 meters
ESD Protection	±8kV air-gap, ±4kV contact (human body model discharge)
Enclosure material	Metal
Finished colour	Black
Dimension	82x50x20mm
Weight (each unit)	0,16 kg
Operating Temperature	0°C ~ 40°C
Storage Temperature	-20°C ~ 60°C
Relative Humidity	20% ~ 90% (non-condensing)
Transmitter	**EXT-UB2-TX**
USB Port	1x USB 2.0 host, USB B Socket
Extension Link Output	1x Valens Link, RJ45
Power Supply	AC 110-240V, 50-60Hz / DC 12V,1A
Power Consumption	1.3W
Receiver	**EXT-UB2-RX**
USB Port	2x USB 2.0 peripheral, USB A Socket
Extension Link Input	1x Valens Link, RJ45
Power Supply	AC 110-240V, 50-60Hz / DC 12V,1A
Power Consumption	2.3W

9. Connection Scheme Example

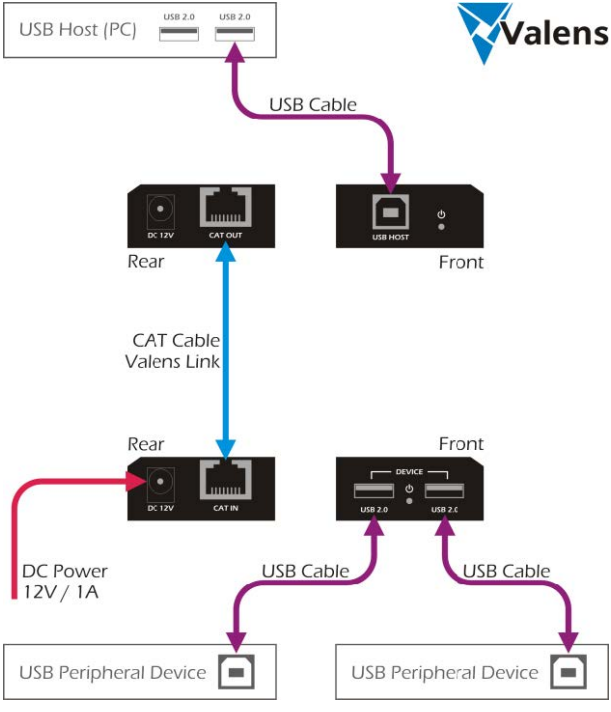

Note: to achieve maximum distance and signal resolution support it is recommended to use direct connection with shielded CAT6 cables for Valens Link connection, for short distances the CAT5e with patch panels and adapters can be used also, but actual distance and bandwidth might be lower.