ADERTECH

MD-BASIC8
MD-BASIC12

Professional Console Mixers

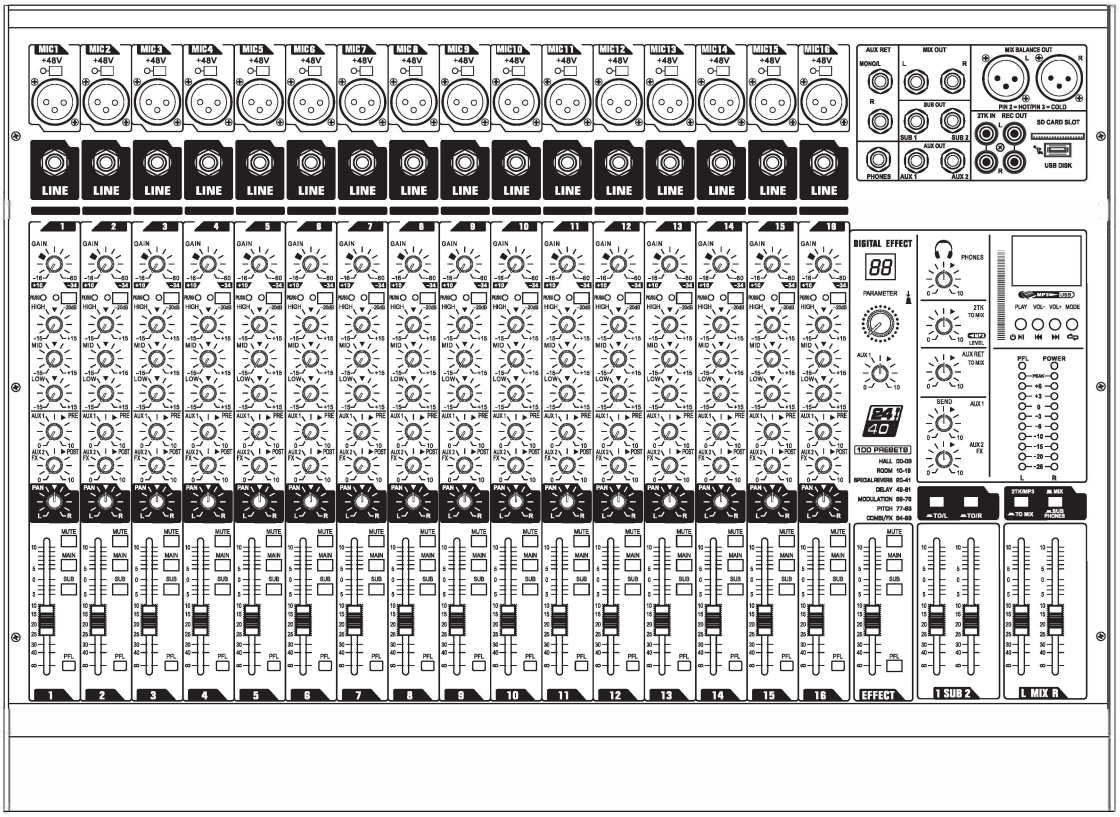

USER GUIDE

CONTENTS

MONO INPUT CHANNEL SECTION 1-2
STEREO OUTPUT SECTION 3
MASTER SECTION 4-5
MP3 PLAYER SECTION 6
REAR VIEW SECTION 6
SPECIFICATIONS 6
TROUBLESHOOTING 7-8
BLOCK DIAGRAM 9

FEATURES

- ▲ 8/12/16/24 mono MIC channels inputs.
- ▲ Main +48V phantom power switch.
- ▲ Built in 16 DSP effect.
- ▲ 2 groups
- ▲ 2 AUX send (AUX 1 send pre-fader,AUX2 send post-fader)
- ▲ 2 band EQ (High:12KHz,low:100Hz)
- ▲ True balance XLR output.
- ▲ PHONES and MONITOR output
- ▲ RCA input and Record output
- ▲ Highly accurate 10 segment 3-color meter.
- ▲ 60 mm high level analysis fader
- ▲ Built in switching power
- ▲ MP3 player with USB/SD card and LCD display.

SAFETY INSTRUCTIONS

CAUTION: To reduce the risk of electrical shock,do not remove the cover (or back). No user serviceable parts inside; refer servicing to qualified personnel.

WARNING: To reduce the risk of fire or electrical shock, do not expose this appliance to rain or moisture.





This symbol, wherever it appears,alerts you to the presence of uninsulated dangerous voltage inside the enclosure - voltage that may be sufficient to constitute a risk of shock.



This symbol, wherever it appears, alerts you to important operating and maintenance instructions in the accompanying literature. Read the manual.



This mixer is designed and evaluated according to the altitude 2000ms. So, it only applies to use safely below 2000ms altitude. If it is used on above 2000m altitude, it will be becoming dangerous.



This mixer is designed and evaluated according to non tropical climate conditions. So, it only applies to use safely in non tropical climate conditions. If it is used for the tropical climate conditions, it will be becoming dangerous.

MONO INPUT CHANNEL SECTION

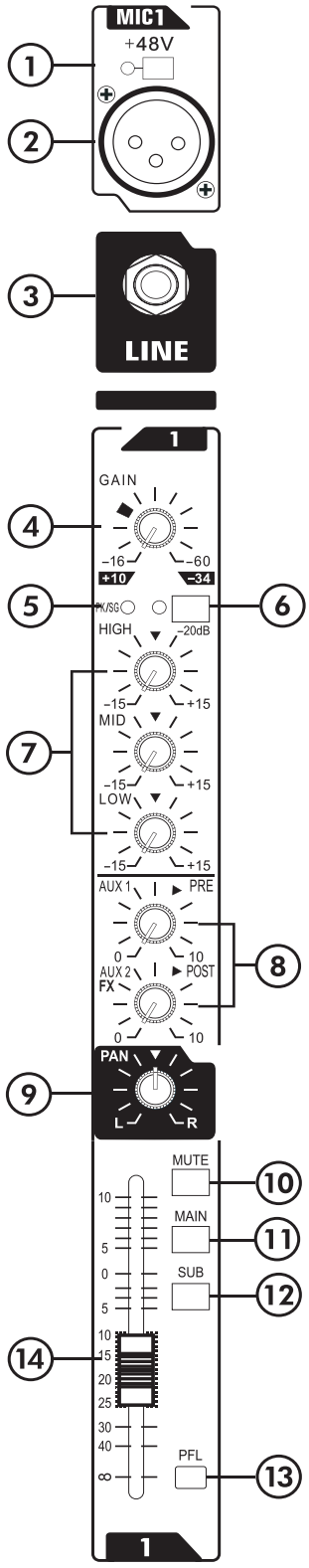

1. +48V Phantom Power

The orange “+48V” LED lights up when the phantom power supply is switched on. The phantom power supply is necessary for condenser microphones and is activated using the switch on the rear of the device.

Please do not connect microphones to the mixer (or the stagebox / wallbox) while the phantom power supply is switched on. Connect microphones before you switch on the power supply. In addition, the monitor / PA loudspeakers should be muted before you activate the phantom power supply. After switching on, wait approx. one minute to allow for system stabilization.

Caution: Please don’t use the unbalance MIC input Caron (1,3 connect jack) while the phantom power is working.

2. BALANCE INPUT (MIC)

Electronically Balanced inputs acceptable a standard XLR male connector.
+48V Phantom Power available on each input Mic socket.
and this switch is on Rear Phantom Power.

3. LINE INPUT

The unbalanced MIc input is provided for the use of an unbalance mic and is designed to accept an unbalanced high impedance input signal.
(This use for connection Deck, Turntable, keyboard etc...)

4. GAIN

This button has a function which adjuts the input sensitivity of each channel in order to input the constant level of the signal.

5. PK

This LED will light when the signal level approaches clipping at any of the three monitored points: PRE-EQ ,POST-EQ and POST-FADE.

6. -20dB

When push this switch attenuates the input signal-20dB.

7. EQUALIZER

HIGH: Control the high frequency tone of each channel. Always set this control to the 12 o'clock position, but you can control the high frequency tone according to the speaker, the conditions of listening position and listener's taste. Clockwise rotation of the control increases level.

MONO INPUT CHANNEL SECTION

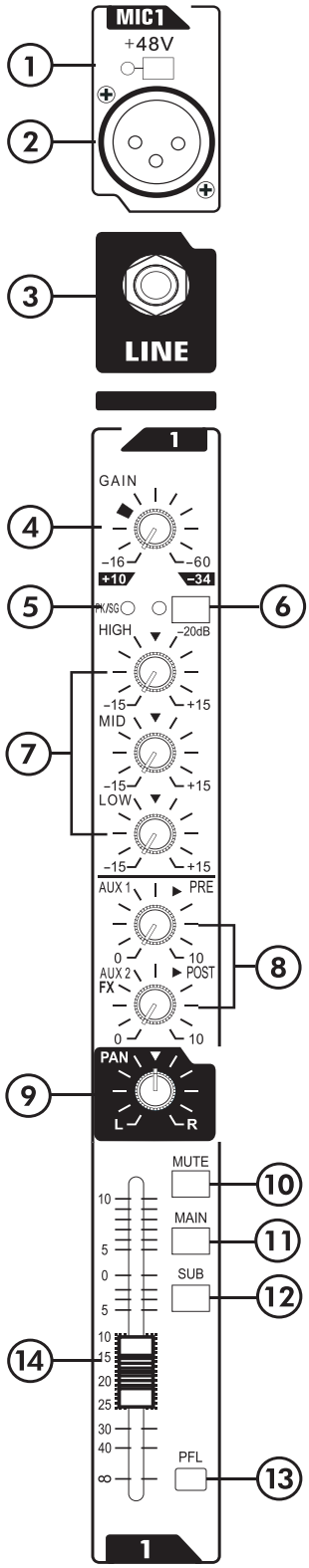

MID: This equalization has a "bell" shaped peak/dip response that cuts or boosts the higher mid frequencies by up to 15dB. the centre frequency can be swept from 240Hz to 6KHz letting you tune in to the frequency you want to adjust. Q=1.5

LOW: Control the low frequency tone of each channel. Always set this control to the 12 o'clock position, but you can control the low frequency tone according to the speaker, the conditions of listening position and listener's taste. Clockwise rotation of the control increases the level.

8. AUX 1 / AUX2 FX

This is normally derived after the EQ section and ,channel fader (PRE-FADER, POSE-EQ), and is therefore unaffected by, the fader position and routing status. This makes the send particularly suitable for foldback or monitor feeds, which need to be controlled separately from the main P.A. Mix. All pre-fade sends may be selected internally to be PRE-FADER, PRE-EQ.

9. PAN

The pan control sends continuously variable amounts of the post fader signal to either the left or right and G1 or G2 main busses. In the center position equal amounts of signal are sent to the left and right or G1 & G2 busses.

10 . MUTE

Press this switch to turn the channel signal off.
The large red LED lights to warn that the channel is muted.

11. MAIN

The main tunnel control switch . when the switch up, no-output.

12. SUB

The group control switch. when the switch up, no-output.

13. PFL

You can monitor the signal of the only channel on which PFL switch is turned "ON" through the headphone. (In ths time, the other channels are automatically cut off).

14.CHANNEL FADER

This is function to adjust the volume of signal connection into each channel and adjust the volume of output, together with master fader. Normal operating position is at the "O" mark, providing 4dB of gain adove that point, if required.

STEREO OUTPUT SECTION

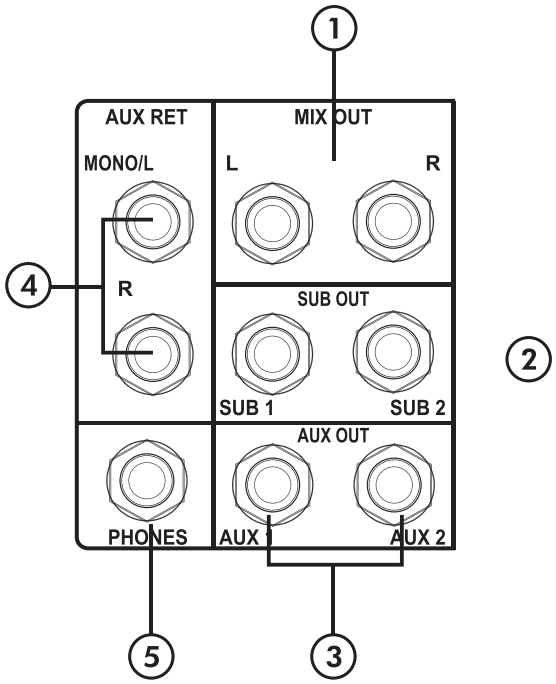

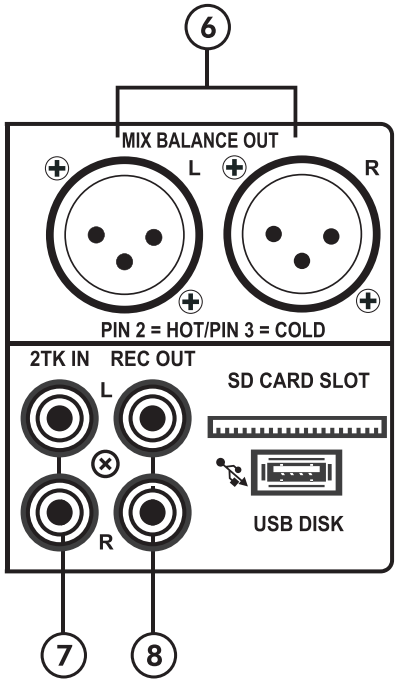

1. MIX OUT

The Mix LEFT and RIGHT outputs are sent from the XLR sockets as balanced signals.

2. SUB OUT

The SUB output jack.

3. AUX1 JACKS

AUX1

This is an impedance balanced phone-jack type output. This jack outputs the signals from AUX (AUX1) bus. You can use this jack, for example, to connect to an effect unit, cue box, or other monitoring system.

AUX2

This is an impedance balanced phone-jack type output that outputs the signals from AUX2 bus. You can use this jack, for example, to connect to an effect unit.

NOTE: The channel fader can adjust the level.

4. MONO L/R Jacks

These are unbalanced phone-jack type line inputs. The signal received by these jacks is sent to the MIX L/R buses and the AUX 1 (AUX2) bus. These jacks are typically used to receive the signal returned from an external effect device (reverb, delay, etc.).

NOTE: These jacks can also be used as an auxiliary stereo input. If you connect to the L (MONO) jack only, the mixer will recognize the signal as monaural and will send the identical signal to boh the L and R jacks.

5. PHONE

This is used for monitoring the master signal and individually monitoring each channel with PFL,L/R & G1/G2.

6. MIX BALANCE OUT

Left/Right master out balanced interface.

7. 2TK IN

These two RCA phone sockets are unbalanced Left and Right line-level inputs, used for connecting a play-back device.

8. REC OUT

These two RCA outputs carry a copy of the MIX L and MIX R signals. They allow the use of a recording device,e.g. DAT player, Minidisc, Cassette tape recorder ect.

MASTER SECTION

1. DIGITAL EFFECT DISPLAY

2. PHONE

This is used for monitoring the master signal and individually monitoring each channel with PFL,L/R & G1/G2.

3. PARAMETER

This control knob adjusting the effect parameter , such as depth, speed and so on. The final using effect parameter will be saved when the mixer is turned off.

4. AUX 1

This used for adjusting the built-in effect level send to AUX bus.Note: The built-in effect level which sent to AUX bus is not controled by EFFECT fader.

5. SEND

This is used for adjusting the volume of AUX1 sound,when sending the AUX singal to used jack.

6. AUX 2 FX

This is used for adjusting the volume of AUX2 sound.

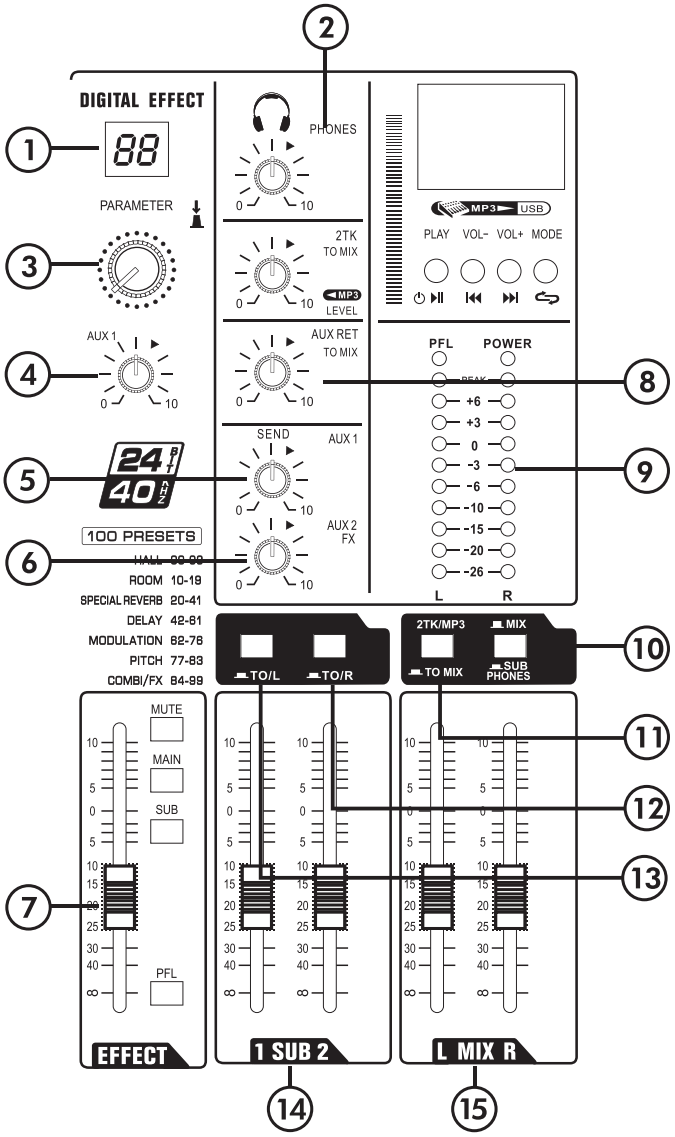

7. EFFECT FADER

This is uesed for adjusting the effect output level of built-in/external effect unit for each channel.

8. AUX RET

This is used for adjusting volume of AUX sound,when sending AUX singal to used jack.

MASTER SECTION

9. POWER LED & LEVEL METERS

POWER: This LED light sindicating power is on for the mixer.

PFL: This LED lights indicating monitor is on.

10 SEGMENT LED LEVELMETERS

The signal level of the MIX output is displayed on the 10 segment LED bar-graph meters. If levels shown is PEAK, please adjust the output level lower.

10.MIX/SUB TO PHONES SWITCH

This is selectswitch for the signal send to PHONES from MIX or SUB. When it is UP, the signal sent from MIX, when it is DOWN, the signal sent from SUB.

11.MIX/SUB TO 2TK/MP3 SWITCH

This is selectswitch for the signal send to 2TK/MP3 from MIX or SUB. When it is UP, thesignal sent from MIX, when it is DOWN, the signal sent from SUB.

12/13. TO L/R SWITCH

These are 2 select switches for the group signal send to MIX or SUB output. When they are pushed DOWN, the group signal send to MIX output.

14. SUB1&2 FADER

This is uesed for adjusting the SUB1/2 output level.

15. MIX L/R FADER

This is uesed for adjusting the MIX L/R output level

16. This built-in digital effects, which included HALL, CHORU, FLANGER, DELAY and MULTI-EFFECT total 100 kinds. Through the channel effect fader sending the signal to the effect processor. It will no need to use more connection cables, then it would be more easily to operate for it can avoid the hum noise and level difference from the original source.

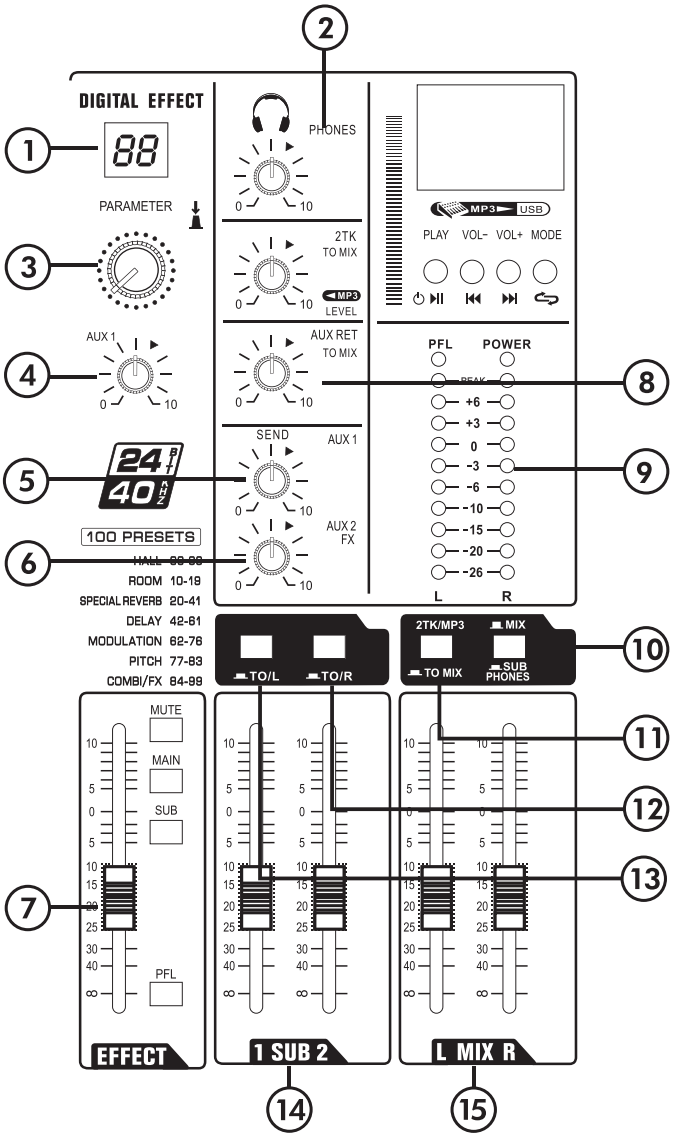

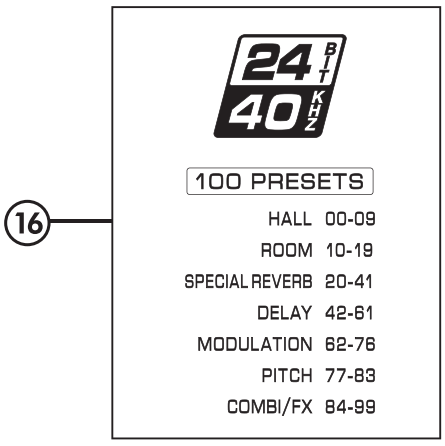

100 Kinds effect

MP3 MASTER SECTION

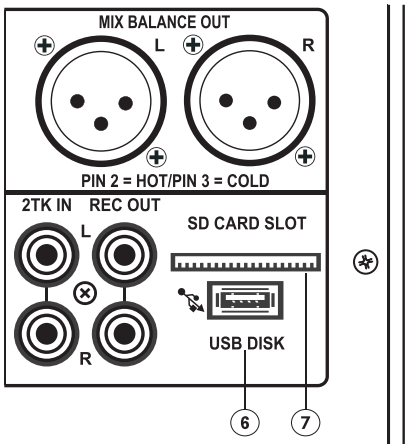

1.PLAY /PAUSE KEY

This is the PLAY/PAUSE key for the USB play. Push this button to PLAY or PAUSE the playing.

2. PREV/VOL- ⏮ BUTTON

These is the search backward and reduce volume of the MP3 player button, push it once to search the previous one, push twice to search previous and previous one; push it more than 3 seconds it will reduce the volume of the MP3 player.

3. NEXT/VOL + ⏭ BUTTON

This is the search forward and add volume of the MP3 play button ,push it once to search the next one ,push twice to search extend next one; push it more than 3 seconds it will add the volume of the MP3 player.

4. MP3 PLAYER PLAY MODE

This is the transfer key for change the playing mode (ALL File Repeat ⇌ Single File Repeat.)

5. MP3 PLAYER DISPLAY

Display the song which one is playing.

6. USB DISK

7.SD CARD SLOT

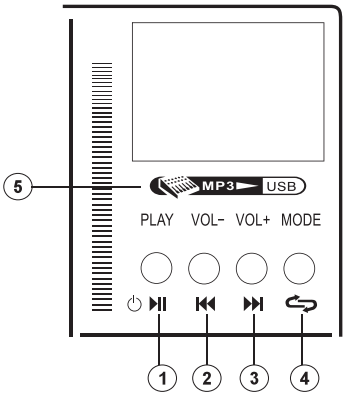

REAR VIEW SECTION

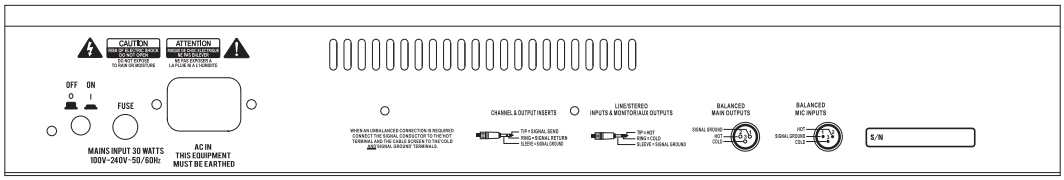

SPECIFICATIONS

MODEL / CONDITION	8 CHANNEL / 12 CHANNEL / 16 CHANNEL / 24 CHANNEL
Tone	Fader down <-85dBu
Nominsl Input Level	Mic 2.4k Ω Line 11K Ω Stereo input 100k Ω
Max Output Level	19dBm(1KHz, THD=0.5%)
Aux send off hess	>86dB
S/N Ratio	71dB
THD	-30d Buinput to mix, mic gain 30db, <0.007%
Frequency Respoinse	20Hz-20Khz ±0.5dB
Headhone output max level	300mw/200 Ω
EQ Mono channel	HF 12KHz ± 15dB MF 2.5KHz ± 15dB LF 80Hz ± 15dB
Power Consumption	<30W
Power Supply	AC 100-240V / 50-60Hz

TROUBLESHOOTING

If you're having problems operating the Mixer, this troubleshooting index will help you correct them.

Symptoms	Cause	Solution
No sound from the mixer.	Mixer is not plugged in or turned on.	Plug in mixer and turn it on.
	Channel levels are too low.	Turn up channel levels.
	Control room level is turned down	Turn up control rom level.
	The appropriate signal hasn't been assigned to the control room out.	In the master section of the mixer, be sure be right switch is selected.
	Cable is not plugged into output jack	Check outputs to make sure cables are plugged in securely.
	Headphones are not plugged into PHONE jack.	Plug headphones into PHONE jack.
	Monitor or headphone amplifier is turned off or down.	Turn amplifier on or up.
	Bad cable.	Check all cables; substitute cables with known good ones.
Audio signal is distorted.	Channel level is too high.	Set channel levels correctly procedure on page 8.
	Channel input is too high.	Turn down your instrument to a normal volume and then set channel levels
	AUX RET level is too high.	Low the level of AUX RET in the master section of the mixer.
	L/R MIX level is too high.	Turn down the L/R MIX level control in the master section of the mixer.
Audio signal carries an unwanted hum.	Too much low-level noise in the mix	Engage the channel's high-pass filter by pressing the -20dB switch.
	Interference from appliances such as air conditioners.	Engage the channel's high-pass filter by pressing the -20dB switch.
	Not using TRS cables.	Make sure you are using 1/4" TRS cables.

TROUBLESHOOTING

Microphone level is too low.	Phantom power is not turned on.	Turn on phantom power using the switch on the rear panel of the mixer.
	Microphone is damaged.	Test the microphone on other audio devices. If you detect damage, contact the manufacturer or dealer.
No or low sound from a channel.	Channel level is too low.	Turn up channel level.
	Instrument volume is too low.	Turn up the instrument's volume control. If problem persists, check the instrument by plugging headphones into the insturmert's phone jack.
	Gain is too low.	Adjust the channel's GAIN control.
Internal effects aren't working.	Effects level is too low.	Turn up the level using th EFFECTS LEVEL control in the master section of the mixer.
	An effect hasn't been selected.	Press the EFFECTS knob on the desired effect and make sure the SIG indicator is lit.
External effects aren't working.	Effects processor is not plugged in or turned on.	Make sure unit is plugged in and turned on.
	Aux outputs of mixer aren't connected to inputs of processor or processor's outputs aren't connected to mixer's inputs.	Make sure the mixer's aux outputs are connected to the processor's inputs and that the processor's outputs are connected to the mixer's aux inputs.
	Mixer's effects return signal is too low.	Turn up the output of the effects processor or turn up the mixer's EFFECTS LEVEL in the master section.
LED meters not working.	Nothing is routed to the HDPH/CTRL RM output.	Press the desired MIX or 2 TK To Mix button.
No power	Incorrect ro defective power supply.	Replace with correct power supply (only use recommended AC output power supply).

BLOCK DIAGRAM

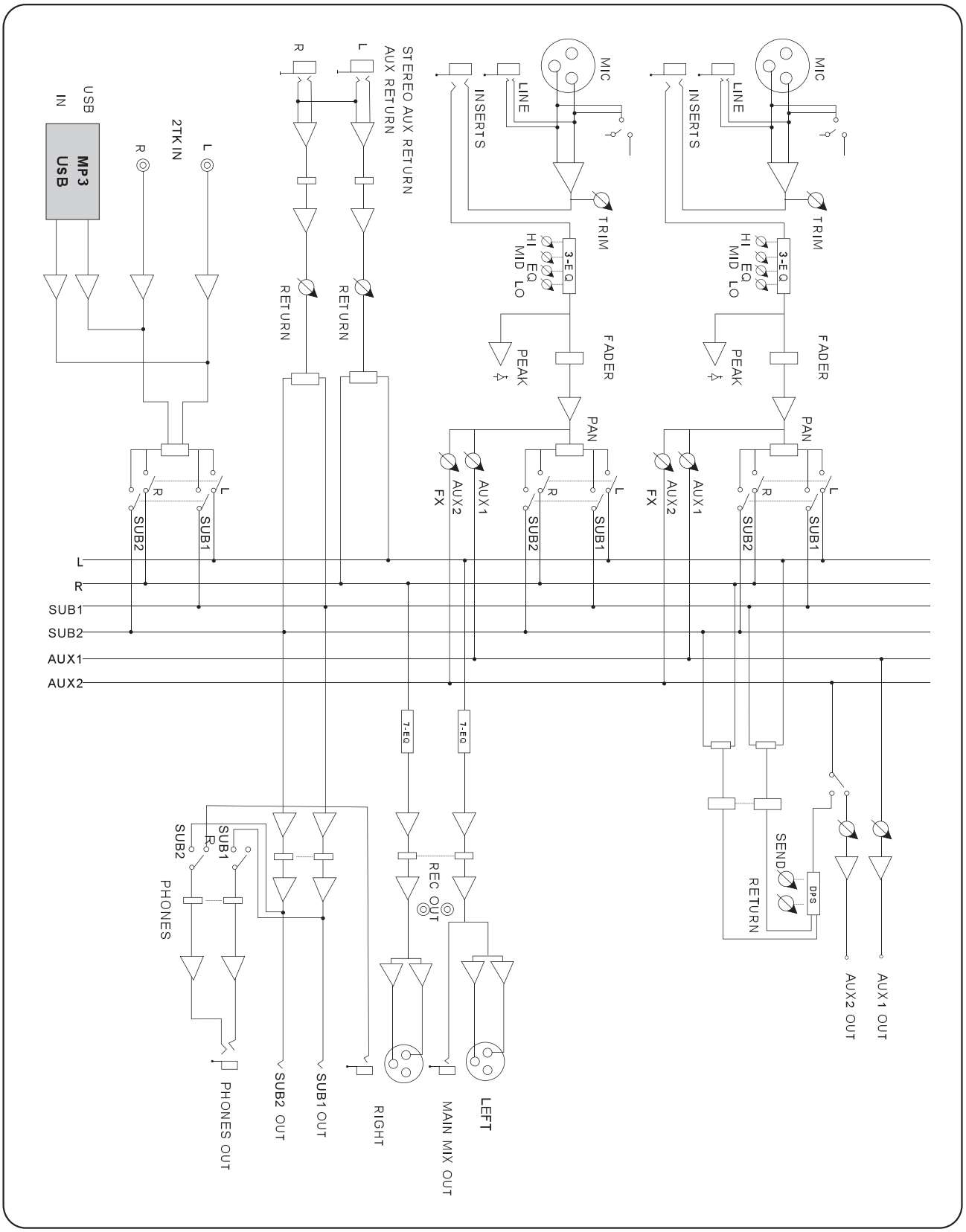

We have done everything possible to ensure that our equipment pleases our consumers. When solving any problems in the operation and connection ADERTECH equipment, it is best to contact authorized companies and specialists who work with our equipment. Our equipment is intended for professional use, so you have professional skills in using such equipment. ADERTECH is a manufacturer of a wide range of multimedia solutions.

All trademarks are the property of their respective owners. ADERTECH is not responsible for any errors that may appear in this document.publication. Product, pricing and feature information contained herein is subject to change without notice.
© 2023 ADERTECH Co Ltd. The Aberman logo and associated visual identity are trademarks or registered trademarks of ADERTECH and/or its affiliates