ADERTECH

EXT-AS-300



Analog and Digital Audio
CAT Extender up to 100 meters

Table of Contents

1. Introduction 3

2. Features 3

3. Package Contents 4

4. Warranty Information 4

5. Unit's interfaces 5
   5.1 Transmitter Unit 5
   5.2 Receiver Unit 5
   5.3 Link Interface 5

6. Best Practice 6

7. Safety Instructions 6

8. Specifications 7

9. Connection Scheme Example 8

1. Introduction

ADERTECH EXT-AS-300 – is an Audio extender over CAT cable. System supports point-to-point extension with unidirectional transmission for Analog and Digital Audio signals. The extension range is up to 300 meters over CAT5e or CAT6 cable. Extender supports Digital Audio Signals with maximum sampling rate up to 192 kHz. Transmitter unit is equipped with Analog Unbalanced Stereo Audio Input on RCA connectors and Digital S/PDIF interface with Optical TOSlink port. Receiver unit has the similar Analog and Digital Output Interfaces. Both interfaces could be used with different sources at the same time. While TOSlink port of the Receiver unit always outputs signal from Digital Input, the source for the Analog Audio Output can be selected between the Analog and Digital Inputs by setting the selecting switch to the appropriative position. This feature allows using unit as Digital to Analog Converter. Extension distance support is varying based on cable type and signal bandwidth: for 48 kHz sample rate up to 300m and for 192 kHz up to 100m. Transmitter and Receiver units housed in the compact and robust metal cases and ensure protection and cooling the system components. Units could be powered by the external USB power supplies or over CAT cable using PoC technology.

2. Features

- Two in One – Independent Analog and Digital Extension
- Up to 300 meters over single CAT5e or CAT6 cable
- Unbalanced Stereo Audio on RCA Connectors
- Digital S/PDIF Interface on TOSlink Port
- Support LPCM, Dolby Digital, Dolby Digital Plus and DTS formats
- Support sampling rates from 32 to 192kHz with up to 24-bit samples
- DAC feature for Analog Output on Receiver
- Extension distance: 100m - 192 kHz, 150m – 96kHz, 300m – 48 kHz
- Units are housed in compact cases
- Power by standard Micro USB port and PoC feature

3. Package Contents

1× EXT-AS-300-TX Transmitter Unit
1× EXT-AS-300-RX Receiver Unit
1× USB cable (USB A – Micro USB)
1× User Manual

4. Warranty Information

ADERTECH warrants all units to be free from defects in workmanship and materials, under normal use and service, for a period of one (1) year from the date of purchasing from authorized reseller.
If a product does not work as it warranted during this period, ADERTECH will repair or replace the defective product or its part. Replacement products may be new or reconditioned.

Warranty ends if the product has been damaged due to abuse, misuse, neglect, accident, unusual physical or electrical stress, unauthorized modifications, tampering, alterations, or servicing other than by ADERTECH or its authorized centers, causes other than from ordinary use or failure to properly use the Product in the application for which said Product is intended.

5. Unit's interfaces

5.1 Transmitter Unit



N	Type	Description
1	LED White	Power Indicator, active when power is applied to the unit
2	RJ45 Socket	Link Output Interface – connect CAT cable to Receiver
3	TOSlink	S/PDIF Optical Audio Input – connect to Digital Audio Source
4	RCA Socket	Unbalanced Stereo Audio Input Right Channel – connect to Source
5	RCA Socket	Unbalanced Stereo Audio Input Left Channel – connect to Source
6	Micro USB Socket	DC Power Connector, 5V, 1A – connect Power Supply

5.2 Receiver Unit



N	Type	Description
1	LED White	Power Indicator, active when power is applied to the unit
2	Analog Out Switch	Select Audio Source for Analog Output – Analog or Digital
3	RJ45 Socket	Link Input Interface – connect CAT cable to Transmitter
4	TOSlink	S/PDIF Optical Audio Output – connect to Digital Audio Receiver
5	RCA Socket	Unbalanced Stereo Audio Output Right Channel – connect to Speaker
6	RCA Socket	Unbalanced Stereo Audio Output Left Channel – connect to Speaker
7	Micro USB Socket	DC Power Connector, 5V, 1A – connect Power Supply

5.3 Link Interface

The link between Transmitter and Receiver uses CAT cable for sending both digital and analog signals data.

The PoC technology enables powering over CAT cable feature. This means that only one external power supply has to be connected to Transmitter or Receiver Unit, while other unit will be powered over the CAT cable. Do not connect any PoC incompatible units to RJ45 ports - it can seriously damage equipment.

6. Best Practice

ADERTECH engineers design products at the highest quality standards. To get the best results from our products, please read this manual carefully. We recommend using the best quality connectors, cables, and adapters. Consider the points below when you choose accessories and position equipment.

For best results with HDMI/DVI, use good quality cables up to 5 meters long for 4K and up to 15 meters for 1080p, or shorter if you are using any connection adapters. If you need to place your equipment more than 15 meters apart, we recommend using a signal extender. See ADERTECH product line of signal extenders to find correct one. Use only graded Speed HDMI cables.

In industrial environments, use shielded CAT cables (STP, FTP, F/UTP or S/FTP) with digital extenders. To achieve best performance and maximum distance use appropriate fiber optical types (Multi or Single Mode) and grades for optical extenders.

7. Safety Instructions

WARNING: To reduce the risk of fire or electric shock, do not expose this device to rain or moisture. Do not use this device near water. Clean only with a dry cloth.

Protect the power cord from being walked on or pinched particularly at plugs, convenience receptacles, and the point where they exit from the device. This unit must be connected to an earthed mains socket outlet with the supplied cable. The AC wall outlet should be installed near to the unit and be easily accessible.

If using extenders which run a long distance, the protective earth circuit of the socket should be verified by a skilled person to ensure equipotential earth bonding. Do not use unit on objects or installations where power lines have grounding and/or different phase issues. Unplug units during lightning storms or when unused for long periods of time. Do not install unit near any heat sources such as radiators, heat registers, stoves, or devices (including amplifiers) that produce heat. Do not block any ventilation openings. This unit uses active cooling with fans. Do not install unit in dusty and/or dirty places. Use professional equipment racks with air condition and filters.

8. Specifications

SKU	EXT-AS-300
Type	Audio over CAT Extender
Analog Interface	Unbalanced Stereo Audio
Digital Interface	S/PDIF, optical TOSlink
Supported Formats	LPCM, Dolby Digital, Dolby Digital Plus, DTS up to 5.1
Sampling Rates	32 kHz, 44.1 kHz, 48 kHz, 96 kHz, 176.4 kHz, 192 kHz
Bit Depth	24-bit
Transmission Distance	Depends on the Sample Rate
	100 meters -192 kHz
	150 meters - 96 kHz
	300 meters - 48 kHz
ESD Protection	±8kV air-gap, ±4kV contact (human body model discharge)
Enclosure material	Metal
Finished colour	Black
Dimension	90x72x20mm
Weight (each unit)	0,17 kg
Operating Temperature	0°C ~ 40°C
Storage Temperature	-20°C ~ 60°C
Relative Humidity	20% ~ 90% (non-condensing)

Transmitter	EXT-AS-300-TX
Analog Audio Input	1x Unbalanced Stereo Analog Audio, 2x RCA Socket
Digital Audio Input	1x S/PDIF, TOSlink Socket
Extension Link Output	1x Link, RJ45
Power Supply	USB, DC 5V,1A
Power Consumption	<1.5W

Receiver	EXT-AS-300-RX
Analog Audio Output	1x Unbalanced Stereo Analog Audio, 2x RCA Socket
Digital Audio Output	1x S/PDIF, TOSlink Socket
Extension Link Input	1x Link, RJ45
Power Supply	USB, DC 5V,1A
Power Consumption	<1.5W

9. Connection Scheme Example

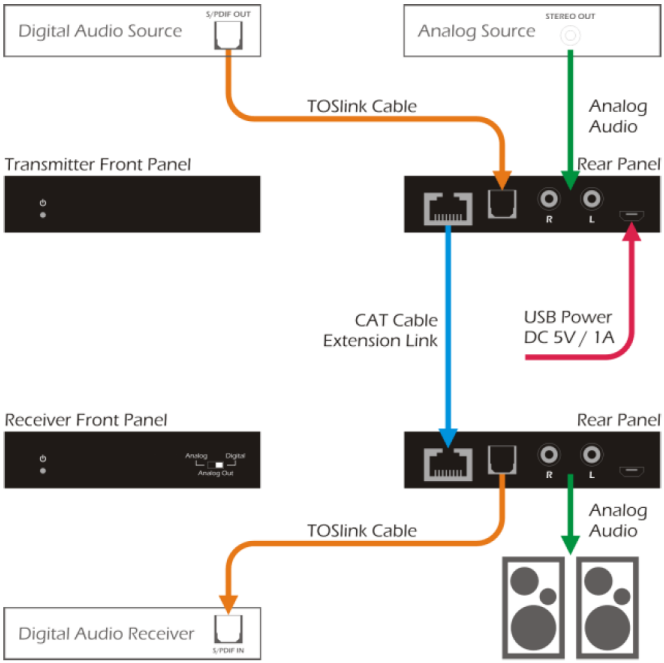

Note: to achieve maximum distance and signal resolution support it is recommended to use direct connection with shielded CAT6 cables for Link connection, for short distances the CAT5e with patch panels and adapters can be used also, but actual distance and bandwidth might be lower.