NVX-OT-TX

NVX-OT-RX

4K60 over IP 1GbE with Video Wall Processing



User Manual

VER 2.0

Thank you for purchasing this product

We have done everything possible to ensure that our equipment pleases our consumers. When solving any problems in the operation and connection ADERTECH equipment, it is best to contact authorized companies and specialists who work with our equipment. Our equipment is intended for professional use, so you have professional skills in using such equipment. ADERTECH is a manufacturer of a wide range of multimedia solutions.

Surge protection device recommended

This product contains sensitive electrical components that may be damaged by electrical spikes, surges, electric shock, lighting strikes, etc. Use of surge protection systems is highly recommended in order to protect and extend the life of your equipment.

Table of Contents

1. Introduction..... 1
2. Features..... 1
3. Package Contents..... 2
4. Specifications..... 3
5. Operation Controls and Functions..... 5
   5.1 Encoder Panel..... 5
   5.2 Decoder Panel..... 10
   5.3 IR Pin Definition..... 16
6. Rack Mounting Instruction..... 16
   6.1 6U V2 Rack Mounting..... 16
   6.2 1U V2 Rack Mounting..... 18
7. MJPEG Substream Operation Introduction..... 19
   7.1 MJPEG Substream Preview/Configuration via Web Page..... 19
   7.2 VLC Media Player Instruction..... 22
8. Switch Model..... 25
9. 4K over IP System Control..... 26
10. Application Example..... 26

1. Introduction

This product is based on JPEG2000 technology. It integrates Copper port and Fiber port within a single box. Encoder input supports up to 4K60 4:4:4, audio embedding or extracting. Decoder output supports up to 4K60 4:4:4, audio extracting. The product supports ARC/eARC/S/PDIF/Analog audio return function, also supports USB2.0/KVM/Camera, 1G Ethernet, bidirectional RS-232, two-way IR and POE function. Guest mode controls of RS-232, IR, CEC are supported. Built-in two channel RELAY ports and two channel I/O ports for contact control. Dante AV-A mode is supported if the product is license activated.

Built-in MJPEG Substream which supports plenty API commands to achieve flexible configurations is useful for 3rd party control Apps to preview video content.

The system is based on Linux for software development, provides flexible control methods, that are based on the intelligent networking of 1G Ethernet Switch.

2. Features

- ☆ HDCP 2.2 compliant
- ☆ Support 18Gbps video bandwidth
- ☆ Input and output video resolution is up to 4K60 4:4:4, as specified in HDMI 2.0b
- ☆ Signal transmission distance can be extended up to 328ft / 100m via CAT5E/6/6A/7 cable
- ☆ Transmit video, analog/digital audio, IR , RS-232, CEC and USB over Ethernet
- ☆ Integrate Copper port and Fiber port within a single box
- ☆ ARC/eARC/S/PDIF/Analog audio return function
- ☆ Dante AV-A mode is supported if license activated
- ☆ Channel configuration via front panel buttons and LED screen
- ☆ Built-in two channel RELAY ports and two channel I/O ports for contact control
- ☆ Support unicast and multicast functions

- ☆ Support point-to-point, video matrix and video wall functions (video wall supports up to 9x9)
- ☆ Intelligent video wall class management
- ☆ Support MJPEG Substream real-time preview
- ☆ 1G Ethernet Switch
- ☆ Support POE function
- ☆ Built-in web page configuration and control, Telnet and SSH as well
- ☆ HDMI audio formats: LPCM 2.0/5.1/7.1CH, Dolby Digital/Plus/EX, Dolby True HD, DTS, DTS-96/24, DTS-EX DSD, DTS High Res, DTS-HD Master
- ☆ Smart networking design for easy and flexible installation

3. Package Contents

Qty	Item
1	4K60 over IP 1GbE Encoder
1	IR Receiver cable (1.5 meters)
1	IR Blaster cable (1.5 meters)
3	3-pin 3.81mm Phoenix connector
2	4-pin 3.81mm Phoenix connector
1	12V/2.5A Locking Power adapter
2	Mounting ear
4	Machine screw (KM3*4)
1	User Manual

or

Qty	Item
1	4K60 over IP 1GbE Decoder
1	IR Receiver cable (1.5 meters)
1	IR Blaster cable (1.5 meters)
3	3-pin 3.81mm Phoenix connector
2	4-pin 3.81mm Phoenix connector
1	12V/2.5A Locking Power adapter
2	Mounting ear
4	Machine screw (KM3*4)
1	User Manual

4. Specifications

Technical	
HDMI Compliant	HDMI 2.0b
HDCP Compliant	HDCP 2.2
Video Bandwidth	18Gbps
Video Compression Standard	JPEG2000
Video Network Bandwidth	1G
Video Resolution	Up to 4K@60Hz 4:4:4
Color Depth	Input: 8/10/12-bit Output: 8-bit
Color Space	RGB 4:4:4, YCbCr 4:4:4 / 4:2:2 / 4:2:0
HDMI Audio Formats	LPCM 2.0/5.1/7.1CH, Dolby Digital/Plus/EX, Dolby True HD, DTS, DTS-96/24, DTS-EX DSD, DTS High Res, DTS-HD Master
Transmission Distance	100M CAT5E/6/6A/7
IR Level	Default 12V, optional 5V
IR Frequency	Wideband 20K - 60KHz
ESD Protection	IEC 61000-4-2: ±8kV (Air-gap discharge) & ±4kV (Contact discharge)
Connection	
Encoder	Input: 1 x HDMI IN [Type A, 19-pin female] 1 x L/R AUDIO IN [3-pin 3.81mm Phoenix connector] Output: 1 x HDMI OUT [Type A, 19-pin female] 1 x L/R AUDIO OUT [3-pin 3.81mm Phoenix connector] 1 x SPDIF OUT [Optical audio connector] Control: 1 x RS-232 [3-pin 3.81mm Phoenix connector] 1 x LAN (POE) [RJ45 jack] 1 x FIBER [Optical fiber slot] 1 x USB 2.0 HOST [Type B, 4-pin female] 2 x USB 2.0 DEVICE [Type-A, 4pin female] 2 x RELAYS [3.81mm Phoenix connector] 2 x DIGITAL IO [3.81mm Phoenix connector] 1 x IR IN [3.5mm Audio Jack] 1 x IR OUT [3.5mm Audio Jack]

Decoder	Input: 1 x SPDIF IN [Optical audio connector] 1 x L/R AUDIO IN [3-pin 3.81mm Phoenix connector] Output: 1 x HDMI OUT [Type A, 19-pin female] 1 x L/R AUDIO OUT [3-pin 3.81mm Phoenix connector] Control: 1 x RS-232 [3.81mm Phoenix connector] 1 x LAN (POE) [RJ45 jack] 1 x FIBER [Optical fiber slot] 2 x USB 1.1 DEVICE [Type-A, 4-pin female] 2 x USB 2.0 DEVICE [Type-A, 4-pin female] 2 x RELAYS [3.81mm Phoenix connector] 2 x DIGITAL IO [3.81mm Phoenix connector] 1 x IR IN [3.5mm Audio Jack] 1 x IR OUT [3.5mm Audio Jack]
Mechanical	
Housing	Metal enclosure
Color	Black
Dimensions	Encoder/Decoder: 204mm [W] x 136mm [D] x 25.5mm [H]
Weight	Encoder: 631g, Decoder: 626g
Power Supply	Input: AC100 - 240V 50/60Hz, Output: DC 12V/2.5A (US/EU standards, CE/FCC/UL certified)
Power Consumption	Encoder: 8.52W, Decoder: 7.08W (Max.)
Operating Temperature	32 - 104°F / 0 - 40°C
Storage Temperature	-4 - 140°F / -20 - 60°C
Relative Humidity	20 - 90% RH (no condensing)

Resolution / Cable Length	**4K60 - Feet / Meters**	**4K30 - Feet / Meters**	**1080P60 - Feet / Meters**
HDMI IN / OUT	16ft / 5M	32ft / 10M	50ft / 15M
The use of “Premium High Speed HDMI” cable is highly recommended.			

5. Operation Controls and Functions

5.1 Encoder Panel

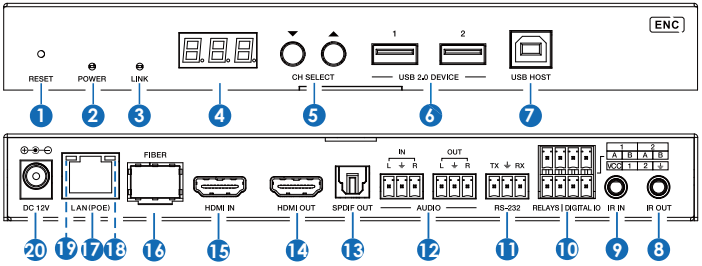

No.	Name	Function Description
1	RESET	After powering on the device, press and hold the RESET button until the POWER LED and LINK LED flash at the same time, release the button to reset the device to factory settings.
2	POWER LED (Red)	▪ Light on: The system is powered on (with POE or DC power supply). ▪ Light off: The system is powered off (without POE or DC power supply).
3	LINK LED (Green)	Connection status LED. ▪ Light on: Encoder and Decoder are connected through the LAN(POE)/FIBER ports, and there is video signal transmitted to the Decoder. ▪ Light flashes: Encoder and Decoder are connected through the LAN(POE)/FIBER ports, but there is no video signal transmitted to the Decoder. ▪ Light off: Encoder and Decoder are not connected through the LAN(POE)/FIBER ports.
4	LED screen	Shows Encoder ID as default. Displays the corresponding options of configuration functions during setting Encoder configurations.
5	CH SELECT	Used to set Encoder ID and other settings.
6	USB 2.0 DEVICE	Connect to USB 2.0 devices.
7	USB HOST	USB-B connector for connecting a PC.
8	IR OUT	IR signal output port. The IR level can be set to 5V or 12V (default) through the panel buttons.

9	IR IN	IR signal input port. The IR level can be set to 5V or 12V (default) through the panel buttons.
10	RELAYS I DIGITAL IO	VCC: Power output (12V or 5V configurable), maximum to 12V @50mA, 5V@ 100mA loading. The default output is 12V. RELAYS: 2 channel low-voltage relay ports, each group is independent and isolated, maximum to 1A 30VDC loading. Contacts are disconnected by default. DIGITAL IO: 2 channel GPIO ports, for digital level signal output control or input detection (up to 12V level detection). The output control mode (default mode, low level as default output) or input detection mode is configurable. The DIGITAL IO internal pull-up voltage follows the VCC. Output control mode: a. The maximum withstand sink current is 50mA when outputting low level. b. When VCC is 5V and high level is output, the maximum current driving capacity is 2mA. c. When VCC is 12V and high level is output, the maximum current driving capacity is 5mA. Input detection mode: a. When VCC is 5V, DIGITAL IO is pulled up to 5V internally through a 2.2K ohm resistor. b. When VCC is 12V, DIGITAL IO is pulled up to 12V internally through a 2.2K ohm resistor.
11	RS-232	RS-232 serial port, supporting RS-232 command pass-through and local serial port control.
12	AUDIO IN/OUT	AUDIO IN: Analog audio input port, the audio can be embedded into the HDMI signal for pass-through over to HDMI output and audio out on Decoder, or be loopout by the AUDIO OUT port on Encoder. AUDIO OUT: Analog audio output port. It can output the audio extracted from the HDMI IN port (in case of LPCM) . Also it can output the audio transmitted from the AUDIO IN port of the Decoder in unicast mode (point-to-point direct connection).
13	SPDIF OUT	S/PDIF signal output port. It can output the ARC or S/PDIF audio returned from the Decoder when both the Encoder and Decoder are correspondingly set to the ARC or S/PDIF audio return mode (Set through the Controller Box or API commands in Multicast mode; Set through the front panel buttons in unicast mode).
14	HDMI OUT	HDMI local loop output port, connected to an HDMI display device such as TV or monitor.
15	HDMI IN	HDMI signal input port, connected to an HDMI source device such as Blu-ray Player or Set-top box with an HDMI cable.
16	FIBER	Connect with optical fiber module, and transmit signals to the Decoder with an optical fiber cable directly or through a Switch.

17	LAN (POE)	1G LAN port, connect network Switch to form a distributed system. *Note: When network switch delivers POE power supply, DC 12V adapter doesn't need to apply on the unit.*
18	Data Signal Indicator lamp (Yellow)	▪ Light flashing: There is data transmission. ▪ Light off: There is no data transmission.
19	Link Signal Indicator lamp (Green)	▪ Light on: The network cable is connected normally. ▪ Light off: The network cable is not connected well.
20	DC 12V	The device can be powered via two methods: ▪ Local DC 12V/2.5A power supply ▪ POE from Network Switch. Device acts as PD mode. When the Switch supports POE function, DC power supply is not needed.

Operation description of the LED screen and CH SELECT buttons (For Encoder).

1, **ENC ID:** After the system is powered on, the Encoder's LED screen will show the ENC ID (000 by default if not set).

2, **IP address:** Press and hold the UP button for 5 seconds, the Encoder's LED screen will show in sequence "IPx", "xxx", "xxx", "xxx", "xxx", which are the IP mode and IP address of Encoder.

3, **Configuration mode:** Press and hold UP + DOWN buttons at the same time for 5 seconds, then release to enter the configuration mode with "CFN" displaying on the LED screen.

4, **Device ID settings:** After entering the configuration mode, press the UP/DOWN button to enter the first page with the current ID number (e.g. 001) displaying on the LED screen (000 by default). Press and hold UP + DOWN buttons for 5 seconds, then release to enter the ID settings mode, in which the ID number (e.g. 001) on the LED screen will flash at 1Hz, then press the UP/DOWN button to select the device ID you desired (ID range: 000~762), then press and hold UP + DOWN buttons for 5 seconds to confirm the setting and stop flashing. After setting, the unit will reboot automatically.
Note: The device ID can not be modified in Controller Box mode.

5, **EDID settings:** After entering the configuration mode, press the UP/DOWN button to enter the second page with "E00" (in which "E" refers to EDID, "00" to EDID ID) or "COP" (which indicates copy EDID) displaying on the LED screen (E15 by default). Press and hold UP + DOWN buttons for 5 seconds, then release to enter the EDID settings mode, in which the EDID ID number (e.g. E01) on the LED screen will flash at 1Hz, then press the UP/DOWN button to select the EDID ID you desired, then press and hold UP + DOWN buttons for 5 seconds to confirm the setting and stop flashing. The corresponding EDID ID is as follows:

EDID ID	EDID Description	EDID ID	EDID Description
E00	1080P_Stereo_Audio_2.0_SDR	E12	4K2K60_420_Stereo_Audio_2.0_SDR
E01	1080P_DolbyDTS_5.1_SDR	E13	4K2K60_420_DolbyDTS_5.1_SDR
E02	1080P_HD_Audio_7.1_SDR	E14	4K2K60_420_HD_Audio_7.1_SDR
E03	1080I_Stereo_Audio_2.0_SDR	E15	4K2K60_444_Stereo_Audio_2.0_SDR
E04	1080I_DolbyDTS_5.1_SDR	E16	4K2K60_444_DolbyDTS_5.1_SDR
E05	1080I_HD_Audio_7.1_SDR	E17	4K2K60_444_HD_Audio_7.1_SDR
E06	3D_Stereo_Audio_2.0_SDR	E18	4K2K60_444_Stereo_Audio_2.0_HDR_10-bit
E07	3D_DolbyDTS_5.1_SDR	E19	4K2K60_444_DolbyDTS_5.1_HDR_10-bit
E08	3D_HD_Audio_7.1_SDR	E20	4K2K60_444_HD_Audio_7.1_HDR_10-bit
E09	4K2K30_444_Stereo_Audio_2.0_SDR	E21	DVI_1280x1024
E10	4K2K30_444_DolbyDTS_5.1_SDR	E22	DVI_1920x1080
E11	4K2K30_444_HD_Audio_7.1_SDR	E23	DVI_1920x1200

Note: In point to point connection mode, before using the EDID copy function, all codecs need to be set to CA1 unicast mode, and after setting, the HDMI cable of the Decoder needs to be re-plugged to report the EDID of TV to the Encoder.

6, **IR mode settings:** After entering the configuration mode, press the UP/DOWN button to enter the third page with “IR2” (in which “IR” refers to IR and “2” to 12V) displaying on the LED screen (IR2 by default). Press and hold UP + DOWN buttons for 5 seconds, then release to enter the settings mode, in which the IR mode (IR1 or IR2) on the LED screen will flash at 1Hz, then press the UP/DOWN button to select the IR mode, then press and hold UP + DOWN buttons for 5 seconds to confirm the setting and stop flashing.
The corresponding IR mode options are as follows:
IR1: 5V IR wire
IR2: 12V IR wire

7, **Audio embedding mode settings:** After entering the configuration mode, press the UP/DOWN button to enter the fourth page with “HDI/ANA” displaying on the LED screen (HDI by default). Press and hold UP + DOWN buttons for 5 seconds, then release to enter the settings mode, in which the audio return mode (HDI/ANA) on the LED screen will flash at 1Hz, then press the UP/DOWN button to select the mode, then press and hold UP + DOWN buttons for 5 seconds to confirm the setting and stop flashing.
The corresponding audio embedding mode options are as follows:
HDI: HDMI audio embedding
ANA: Analog audio embedding

8, **IP mode settings:** After entering the configuration mode, press the UP/DOWN button to enter the fifth page with “IP1/IP2/IP3” displaying on the LED screen (IP3 by default). Press and hold UP + DOWN buttons for 5 seconds, then release to enter the settings mode, in which the IP mode (IP1/IP2/IP3) on the LED screen will flash at 1Hz, then press the UP/DOWN button to select the mode, then press and hold UP + DOWN buttons for 5 seconds to confirm the setting and stop flashing. After setting, the unit will reboot automatically.

The corresponding IP mode options are as follows:

IP1: Static IP mode (Default IP address: 169.254.100.254)

IP2: DHCP IP mode

IP3: Auto IP mode (Default assigned network segment: 169.254.xxx.xxx)

Note: The IP mode can not be modified in Controller Box mode.

9, **Fiber/Copper mode settings:** After entering the configuration mode, press the UP/DOWN button to enter the sixth page with “CPP/FIB” displaying on the LED screen (CPP by default). Press and hold UP + DOWN buttons for 5 seconds, then release to enter the settings mode, in which the Fiber/Copper mode (CPP/FIB) on the LED screen will flash at 1Hz, then press the UP/DOWN button to select the mode, then press and hold UP + DOWN buttons for 5 seconds to confirm the setting and stop flashing. After setting, the unit will reboot automatically.

The corresponding Fiber/Copper mode options are as follows:

CPP: Copper mode

FIB: Fiber mode

10, **Multicast mode settings:** After entering the configuration mode, press the UP/DOWN button to enter the seventh page with “CA1/CA2” displaying on the LED screen (CA1 by default). Press and hold UP + DOWN buttons for 5 seconds, then release to enter the settings mode, in which the multicast mode (CA1/CA2) on the LED screen will flash at 1Hz, then press the UP/DOWN button to select the mode, then press and hold UP + DOWN buttons for 5 seconds to confirm the setting and stop flashing. After setting, the unit will reboot automatically.

The corresponding multicast mode options are as follows:

CA1: Unicast mode

CA2: Multicast mode

11, **Audio return mode settings:** After entering the configuration mode, press the UP/DOWN button to enter the eighth page with “C2C/A2A” displaying on the LED screen (C2C by default). Press and hold UP + DOWN buttons for 5 seconds, then release to enter the settings mode, in which the audio return mode (C2C/A2A) on the LED screen will flash at 1Hz, then press the UP/DOWN button to select the mode, then press and hold UP + DOWN buttons for 5 seconds to confirm the setting and stop flashing. After setting, the unit will reboot automatically.

The corresponding audio return mode options are as follows:

C2C: The eARC/ARC or S/PDIF audio from the Decoder is transmitted back to the HDMI IN or SPDIF OUT port of the Encoder.

A2A: The analog audio embedded in the Decoder is transmitted back to the AUDIO OUT analog audio port of the Encoder.

Note:

(1) The audio return mode can not be modified through front panel buttons in Controller Box or Multicast mode.

(2) Only when both the Encoder and Decoder are correspondingly set to C2C/A2A audio return mode in unicast mode, the audio return can be realized.

(3) The A2A audio return mode is available only in unicast mode.

(4) When to use ARC, ARC audio amplifier on Encoder HDMI IN port and ARC TV on Decoder HDMI OUT port should be used.
When to use eARC, eARC audio amplifier on Encoder HDMI IN port and eARC TV on Decoder HDMI OUT port should be used.

(5) After entering various setting modes, you can hold down the DOWN button to exit the current interface quickly, or if you do not perform any operation within 5 seconds, it will automatically return to the previous interface.

5.2 Decoder Panel

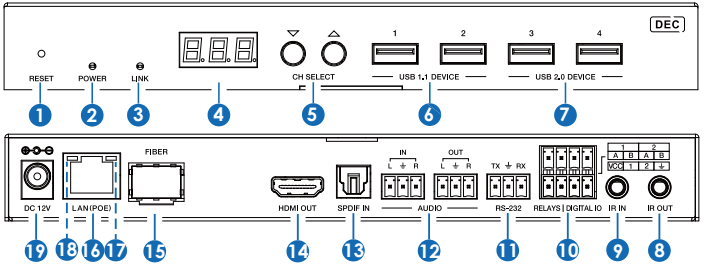

No.	Name	Function Description
1	RESET	After powering on the device, press and hold the RESET button until the POWER LED and LINK LED flash at the same time, release the button to reset the device to factory settings.
2	POWER LED (Red)	▪ Light on: The system is powered on (with POE or DC power supply). ▪ Light off: The system is powered off (without POE or DC power supply).

3	LINK LED (Green)	Connection status LED. ▪ Light on: Encoder and Decoder are connected through the LAN(POE)/FIBER ports, and there is video signal transmitted from the Encoder. ▪ Light flashes: Encoder and Decoder are connected through the LAN(POE)/FIBER ports, but there is no video signal transmitted from the Encoder. ▪ Light off: Encoder and Decoder are not connected through the LAN(POE)/FIBER ports.
4	LED screen	Shows the selected Encoder ID as default. Displays the corresponding options of configuration functions during setting Decoder configurations.
5	CH SELECT	Used to set Decoder ID and other settings.
6	USB 1.1 DEVICE	Connect to USB 1.1 devices, such as Keyboard or Mouse.
7	USB 2.0 DEVICE	Connect to USB 2.0 devices, such as USB flash disk or USB Camera.
8	IR OUT	IR signal output port. The IR level can be set to 5V or 12V (default) through the panel buttons.
9	IR IN	IR signal input port. The IR level can be set to 5V or 12V (default) through the panel buttons.
10	RELAYS I DIGITAL IO	VCC: Power output (12V or 5V configurable), maximum to 12V@50mA, 5V@ 100mA loading. The default output is 12V. RELAYS: 2 channel low-voltage relay ports, each group is independent and isolated, maximum to 1A 30VDC loading. Contacts are disconnected by default. DIGITAL IO: 2 channel GPIO ports, for digital level signal output control or input detection (up to 12V level detection). The output control mode (default mode, low level as default output) or input detection mode is configurable. The DIGITAL IO internal pull-up voltage follows the VCC. Output control mode: a. The maximum withstand sink current is 50mA when outputting low level. b. When VCC is 5V and high level is output, the maximum current driving capacity is 2mA. c. When VCC is 12V and high level is output, the maximum current driving capacity is 5mA. Input detection mode: a. When VCC is 5V, DIGITAL IO is pulled up to 5V internally through a 2.2K ohm resistor. b. When VCC is 12V, DIGITAL IO is pulled up to 12V internally through a 2.2K ohm resistor.

11	RS-232	RS-232 serial port, supporting RS-232 command pass-through and local serial port control.
12	AUDIO IN/OUT	AUDIO IN: Analog audio input port, the audio can be transmitted to Encoder AUDIO OUT in unicast mode (point-to-point direct connection).
		AUDIO OUT: Analog audio output port. It outputs the same audio of that on HDMI OUT in case audio format is LPCM.
13	SPDIF IN	S/PDIF signal input port.
14	HDMI OUT	HDMI signal output port, connected to an HDMI display device such as TV or monitor.
15	FIBER	Connect with optical fiber module, and receive signals from the Encoder with an optical fiber cable directly or through a Switch.
16	LAN (POE)	1G LAN port, connect network Switch to form a distributed system. *Note: When network switch delivers POE power supply, DC 12V adapter doesn't need to apply on the unit.*
17	Data Signal Indicator lamp (Yellow)	▪ Light flashing: There is data transmission. ▪ Light off: There is no data transmission.
18	Link Signal Indicator lamp (Green)	▪ Light on: The network cable is connected normally. ▪ Light off: The network cable is not connected well.
19	DC 12V	The device can be powered via two methods: ▪ Local DC 12V/2.5A power supply ▪ POE from Network Switch. Device acts as PD mode. When the Switch supports POE function, DC power supply is not needed.

Operation description of the LED screen and CH SELECT buttons (For Decoder).

1, **ENC connection:** After the system is powered on, the Decoder's LED screen will show 000 by default if not set. Directly press the UP/DOWN button to select the channel ID of the connected Encoder (ID range: 000~762) to complete connection.

2, **IP address:** Press and hold the UP button for 5 seconds, the Decoder's LED screen will show in sequence "IPx", "xxx", "xxx", "xxx", "xxx", which are the IP mode and IP address of Decoder.

3, **Configuration mode:** Press and hold UP + DOWN buttons at the same time for 5 seconds, then release to enter the configuration mode with "CFN" displaying on the LED screen.

4, **Device ID settings:** After entering the configuration mode, press the UP/DOWN button to enter the first page with the current ID number (e.g. 001) displaying on the LED screen (000 by default). Press and hold UP + DOWN buttons for 5 seconds, then release to enter the ID settings mode, in which the ID number (e.g. 001) on the LED screen will flash at 1Hz, then press the UP/DOWN button to select the device ID you desired (ID range: 000~762), then press and hold UP + DOWN buttons for 5 seconds to confirm the setting and stop flashing. After setting, the unit will reboot automatically.
Note: The device ID can not be modified in Controller Box mode.

5, **Output scaling settings:** After entering the configuration mode, press the UP/DOWN button to enter the second page with “S00” (in which “S” refers to Scaling, and “00” to resolution ID) displaying on the LED screen (S00 by default). Press and hold UP + DOWN buttons for 5 seconds, then release to enter the settings mode, in which the Sxx on the LED screen will flash at 1Hz, then press the UP/DOWN button to select the ID you desired, then press and hold UP + DOWN buttons for 5 seconds to confirm the setting and stop flashing.
The **scaling settings are listed below**:

Scaling Sxx	Resolution Description	Scaling Sxx	Resolution Description
S00	bypass	S07	2160P50
S01	1080P50	S08	2160P60
S02	1080P60	S09	1280x1024
S03	720P50	S10	1360x768
S04	720P60	S11	1440x900
S05	2160P24	S12	1680x1050
S06	2160P30	S13	1920x1200

6, **IR mode settings:** After entering the configuration mode, press the UP/DOWN button to enter the third page with “IR2” (in which “IR” refers to IR and “2” to 12V) displaying on the LED screen (IR2 by default). Press and hold UP + DOWN buttons for 5 seconds, then release to enter the settings mode, in which the IR mode (IR1 or IR2) on the LED screen will flash at 1Hz, then press the UP/DOWN button to select the IR mode, then press and hold UP + DOWN buttons for 5 seconds to confirm the setting and stop flashing.
The corresponding IR mode options are as follows:
IR1: 5V IR wire
IR2: 12V IR wire

7, **eARC/ARC or S/PDIF audio return settings:** After entering the configuration mode, press the UP/DOWN button to enter the fourth page with “ARC/SPD” displaying on the LED screen (ARC by default). Press and hold UP + DOWN buttons for 5 seconds, then release to enter the audio return settings mode, in which the audio return mode (ARC/SPD) on the LED screen will flash at 1Hz, then press the UP/DOWN button to select the mode, then press and hold UP + DOWN buttons for 5 seconds to confirm the setting and stop flashing. The corresponding audio return mode options are as follows:
ARC: eARC/ARC audio return (The audio from the HDMI OUT port of Decoder is transmitted back to the HDMI IN port of the Encoder.)
SPD: S/PDIF audio return (The audio from the S/PDIF IN port of Decoder is transmitted back to the S/PDIF OUT port of the Encoder.)
Note:
(1) The audio return mode can not be modified through front panel buttons in Controller Box or Multicast mode.
(2) Only when both the Encoder and Decoder are set to C2C audio return mode, the eARC/ARC or S/PDIF audio return can be realized.
(3) When to use ARC, ARC audio amplifier on Encoder HDMI IN port and ARC TV on Decoder HDMI OUT port should be used.
When to use eARC, eARC audio amplifier on Encoder HDMI IN port and eARC TV on Decoder HDMI OUT port should be used.

8, **IP mode settings:** After entering the configuration mode, press the UP/DOWN button to enter the fifth page with “IP1/IP2/IP3” displaying on the LED screen (IP3 by default). Press and hold UP + DOWN buttons for 5 seconds, then release to enter the settings mode, in which the IP mode (IP1/IP2/IP3) on the LED screen will flash at 1Hz, then press the UP/DOWN button to select the mode, then press and hold UP + DOWN buttons for 5 seconds to confirm the setting and stop flashing. After setting, the unit will reboot automatically.
The corresponding IP mode options are as follows:
IP1: Static IP mode (Default IP address: 169.254.100.253)
IP2: DHCP IP mode
IP3: Auto IP mode (Default assigned network segment: 169.254.xxx.xxx)
Note: The IP mode can not be modified in Controller Box mode.

9, **Fiber/Copper mode settings:** After entering the configuration mode, press the UP/DOWN button to enter the sixth page with “CPP/FIB” displaying on the LED screen (CPP by default). Press and hold UP + DOWN buttons for 5 seconds, then release to enter the settings mode, in which the Copper/Fiber mode (CPP/FIB) on the LED screen will flash at 1Hz, then press the UP/DOWN button to select the mode, then press and hold UP + DOWN buttons for 5 seconds to confirm the setting and stop flashing. After setting, the unit will reboot automatically.
The corresponding Fiber/Copper mode options are as follows:
CPP: Copper mode
FIB: Fiber mode

10, **Multicast mode settings:** After entering the configuration mode, press the UP/DOWN button to enter the seventh page with “CA1/CA2” displaying on the LED screen (CA1 by default). Press and hold UP + DOWN buttons for 5 seconds, then release to enter the settings mode, in which the Multicast mode (CA1/CA2) on the LED screen will flash at 1Hz, then press the UP/DOWN button to select the mode, then press and hold UP + DOWN buttons for 5 seconds to confirm the setting and stop flashing. After setting, the unit will reboot automatically.

The corresponding multicast mode options are as follows:

CA1: Unicast mode

CA2: Multicast mode

11, **Audio return mode settings:** After entering the configuration mode, press the UP/DOWN button to enter the eighth page with “C2C/A2A” displaying on the LED screen (C2C by default). Press and hold UP + DOWN buttons for 5 seconds, then release to enter the settings mode, in which the audio return mode (C2C/A2A) on the LED screen will flash at 1Hz, then press the UP/DOWN button to select the mode, then press and hold UP + DOWN buttons for 5 seconds to confirm the setting and stop flashing. After setting, the unit will reboot automatically.

The corresponding audio return mode options are as follows:

C2C: The eARC/ARC or S/PDIF audio from the Decoder is transmitted back to the HDMI IN or S/PDIF OUT port of the Encoder.

A2A: The analog audio embedded in the Decoder is transmitted back to the AUDIO OUT analog audio port of the Encoder.

Note:

(1) The audio return mode can not be modified through front panel buttons in Controller Box or Multicast mode.

(2) Only when both the Encoder and Decoder are correspondingly set to C2C/A2A audio return mode in unicast mode, the audio return can be realized.

(3) The A2A audio return mode is available only in unicast mode.

(4) When to use ARC, ARC audio amplifier on Encoder HDMI IN port and ARC TV on Decoder HDMI OUT port should be used.
When to use eARC, eARC audio amplifier on Encoder HDMI IN port and eARC TV on Decoder HDMI OUT port should be used.

(5) After entering various setting modes, you can hold down the DOWN button to exit the current interface quickly, or if you do not perform any operation within 5 seconds, it will automatically return to the previous interface.

5.3 IR Pin Definition

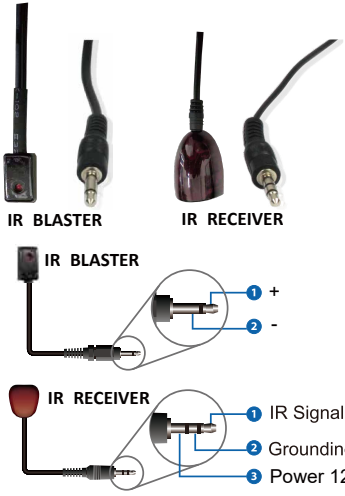

6. Rack Mounting Instruction

6.1 6U V2 Rack Mounting

This product can be mounted in a standard 6U V2 rack (Please contact your supplier for 6U V2 rack sale). The mounting steps are as follows:

Step 1: Use included screws to fix two mounting ears on the product, as shown in the figure below:



Step 2: Insert the product with mounting ears into a 6U V2 rack (6/8/10 units can be installed vertically), as shown in the figure below:

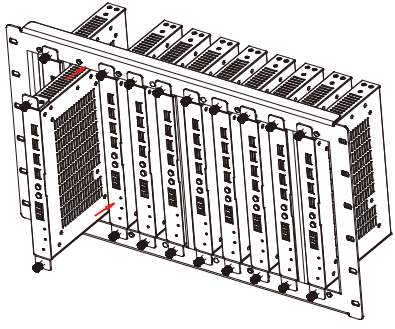

Step 3: Use screws to fix mounting ears on the rack to complete the mounting, as shown in the figure below:

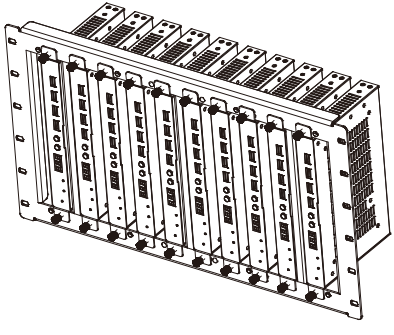

6.2 1U V2 Rack Mounting

This product also can be mounted in a standard 1U V2 rack (2 units can be installed horizontally). The mounting steps are as follows:

Step 1: Use included screws to fix two 1U V2 rack brackets on two products respectively, as shown in the figure below:

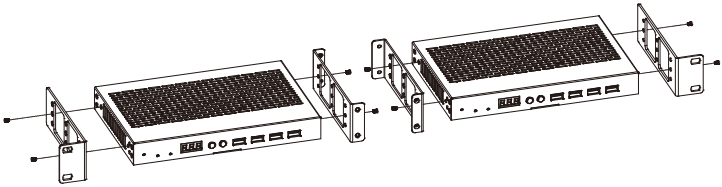

Step 2: Use screws to fix two 1U V2 rack brackets together, as shown in the figure below:

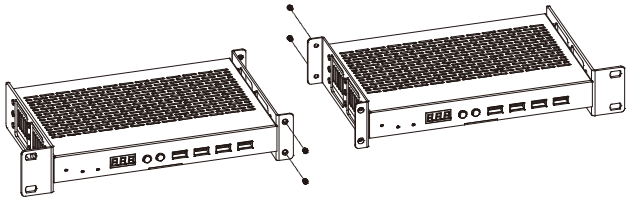

Step 3: Fasten screws between two 1U V2 rack brackets, so that two products are mounted in a 1U V2 rack, as shown in the figure below:

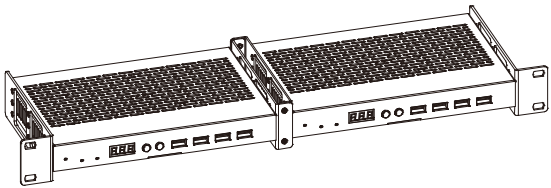

7. MJPEG Substream Operation Introduction

7.1 MJPEG Substream Preview/Configuration via Web Page

The product supports playing MJPEG Substream on computer through the corresponding software such as **VLC media player**, simultaneously you can access the Web page to configure the MJPEG Substream.
Follow the steps below to preview and configure the MJPEG Substream.

Step 1: Connect the Encoder, Decoder and PC to the same Switcher, then connect an HDMI source device and power supply. The connection diagram is shown as below.

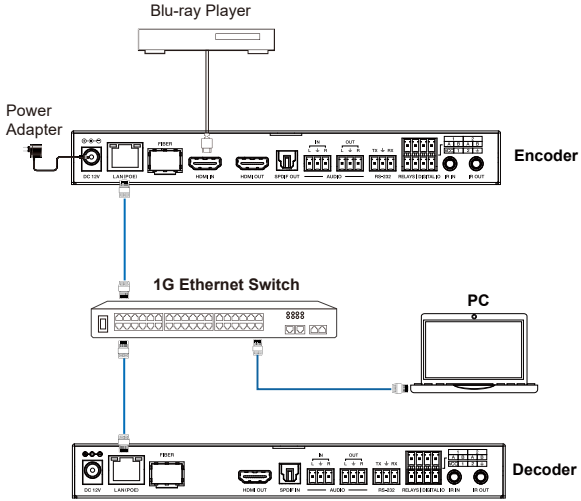

Step 2: Install a bonjour protocol checking tool (such as zeroconfService Browser) on PC to find the IP address of the Encoder/Decoder.
Take zeroconfServiceBrowser as an example. After opening the software, you can select “Workgroup Manager” in Services of Browser, select the Host name in Service-Instances, and find the IP address in the Address item in of Instance-Info.

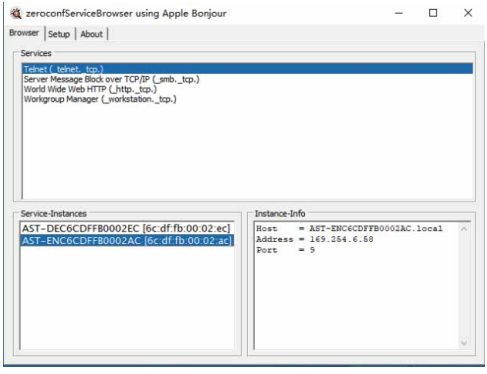

Note:

(1) The window in the lower left corner displays the Host names of all devices in the current network.

(2) The window in the lower right corner displays the Host name, IP address and Port number of the device.

(3) The Host name of Encoder starts with AST-ENC; the Host name of Decoder starts with AST-DEC.

Step 3: Set the PC's IP address to the same network segment with IP address of the Encoder/Decoder found in step 2.

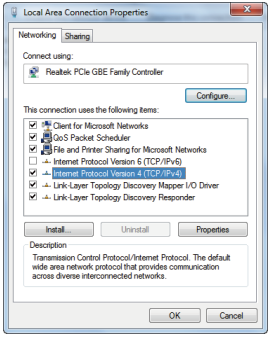

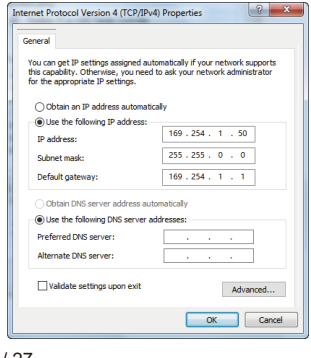

Step 4: According to the IP address of the Encoder/Decoder found through the bonjour protocol checking tool, input “http://IP:PORT/?action=stream” into the web browser on PC. The MJPEG Substream will be displayed with the default resolution, as shown in the figure below.

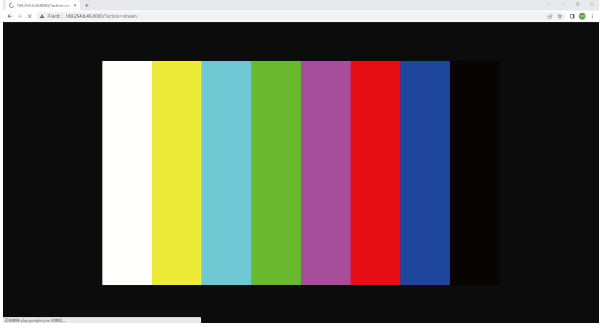

Step 5: Change the resolution of the obtained Encoder/Decoder IP address in the following format.

http://IP:PORT/?action=stream&w=x&h=x&fps=x&bw=x&as=x&mq=x

- WIDTH: [Optional] image width. In pixels. ‘x’ means no change. Default is 640.
- HEIGHT: [Optional] image height. In pixels. ‘x’ means no change. Default is 360.
- FRAMERATE: [Optional] frame rate of sub-stream. Unit: fps (frame per second). ‘x’ means no change. Default is 30.
- BW: [Optional] maximum bandwidth of sub-stream traffic. Unit: Kbps (Kbits per second). ‘x’ means no change. Default is 8000 (8Mbps).
- AS: [Optional] aspect ratio configuration. ‘x’ means no change. Default is 0.
- 0: extend to what “WIDTH” and “HEIGHT” configured
- 1: [A1 only] keep original aspect ratio and place in the center of output (letterboxing or pillarboxing)
- MINQ: [Optional] minimum image quality number. Range: 10, 20, …, 90, 100, higher setting means better image quality. ‘x’ means no change. Default value is 10. Limit driver auto bandwidth control’s minimum quality number. If quality lower then MINQ value, the driver will drop frame by returning 0 size file.

After changing, input the new Encoder/Decoder IP address into the web browser on PC, the MJPEG Substream will be displayed with the desired resolution, as shown in the figure below.

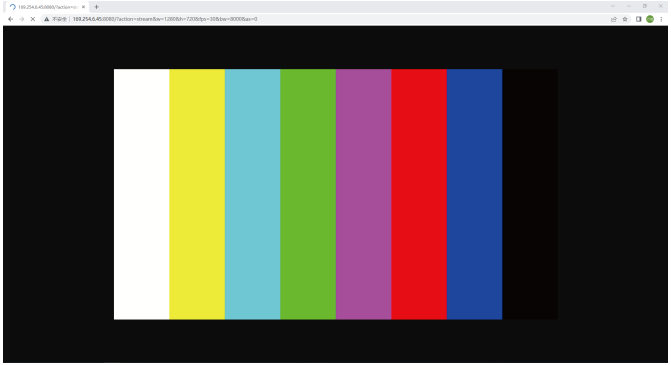

7.2 VLC Media Player Instruction

Firstly, perform the step 1~3 as described in Chapter 7.1, then open the VLC media player on PC. Please see the following icon.



Click “Media > Open Network Stream”

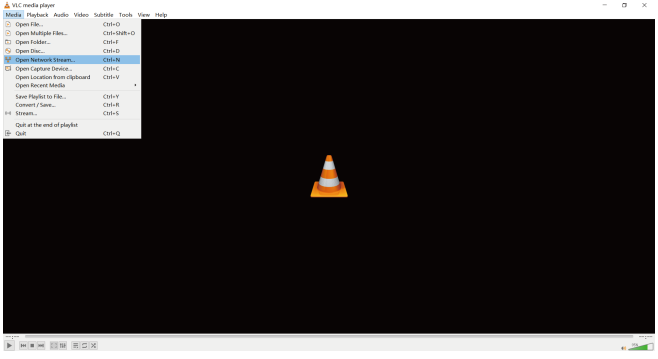

After clicking the “Open Network Stream” option, the following page will appear.

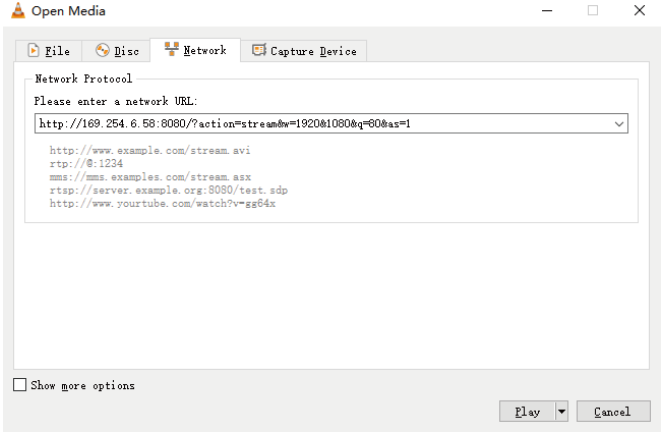

Enter the MJPEG Substream network URL, then click “**Play**” button.

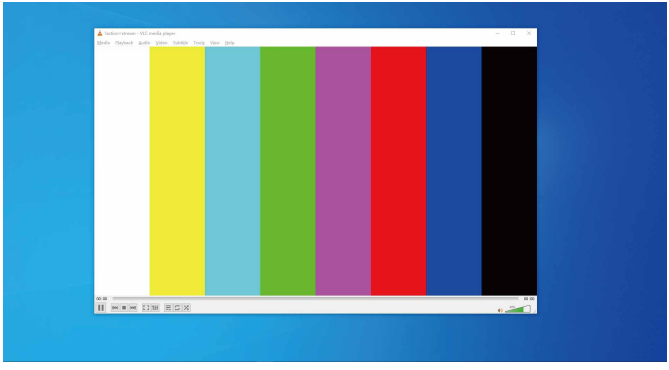

Choose “**Tools>Codec information**”, a pop-up window will display and show you Stream information, as shown in the figure below.

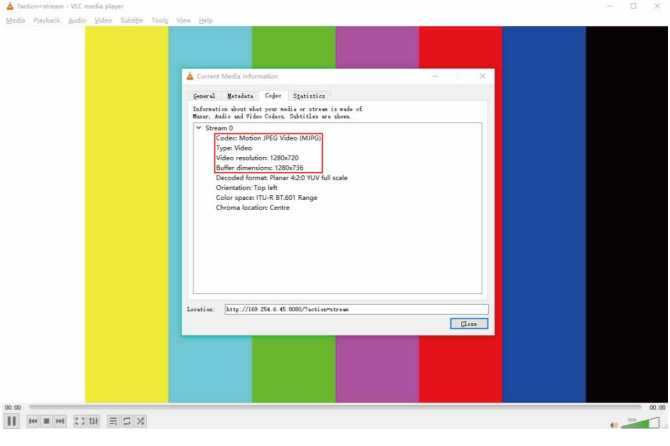

Choose “**Tools>Codec information>Statistics**” to check current Bitrate. Please see the following picture.

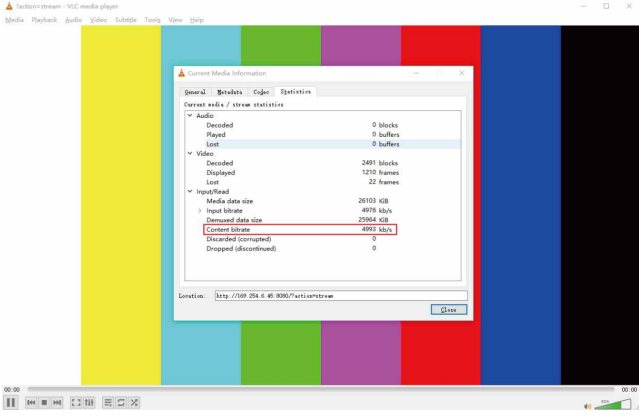

Note: *The Bitrate is floating up and down when you check it. This is a normal phenomenon.*

8. Switch Model

A network Switch used to set up the system should support below features:

1. Type of layer 3/managed network Switch.
2. Gigabit bandwidth.
3. 8KB jumbo frame capability.
4. IGMP snooping.

The following Switch models are highly recommended.

Manufacturer	Model Number
CISCO	CISCO SG500
CISCO	CATALYST series
HUAWEI	S5720S-28X-PWR-LI-AC
ZyXEL	GS2210
LUXUL	AMS-4424P

9. 4K over IP System Control

This product can be controlled by Controller Box or third-party controller. For details of 4K over IP system control, please refer to the user manual of “Video over IP Controller”.

10. Application Example

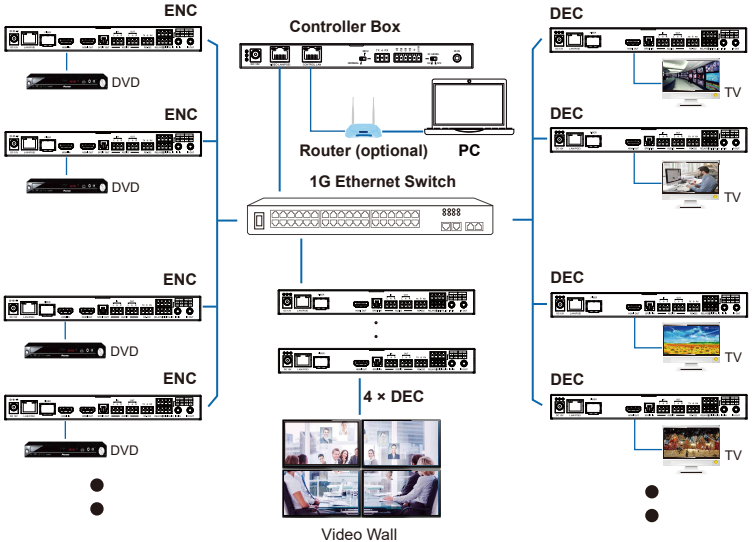

Note:

(1) For the default IP mode of Control LAN port of the Controller Box is DHCP, the PC also needs to be set to “Obtain an IP address automatically” mode, and a DHCP server (e.g. network router) is required in the system.

(2) If there is no DHCP server in the system, 192.168.0.225 will be used as the IP address of Control LAN port. You need to set the IP address of the PC to be in the same network segment. For example, set PC’s IP address as 192.168.0.88.

(3) You can access the Web GUI by inputting Control LAN port IP address (192.168.0.225) or URL "http://controller.local" on your computer's browser.

(4) No need to care about settings of Video LAN port of the Controller Box, they are managed by Controller automatically (Default).

(5) When the Network Switch does not support PoE, the Encoder, Decoder and Controller Box should be powered by DC power adapter.

All trademarks are the property of their respective owners. ADERTECH is not responsible for any errors that may appear in this document.publication. Product, pricing and feature information contained herein is subject to change without notice.
© 2023 ADERTECH Co Ltd. The ADERTECH logo and associated visual identity are trademarks or registered trademarks of ADERTECH and/or its affiliates