TRIPLE-8

The TRIPLE-8 60W outdoor waterproof speaker delivers exceptional clarity and powerful bass with its 8"×1 woofer and 1"×1 tweeter, covering a frequency response from 55Hz-20kHz. With 88dB sensitivity and a maximum SPL of 106dB, it ensures efficient and dynamic sound projection. Housed in an IP66-rated, all-weather enclosure, it is perfect for reliable performance in any outdoor or indoor environment.



- Specialized in sound quality, featuring a passive radiator and equipped with both tweeter and woofer units to deliver clear, transparent, and bright sound with rich, powerful bass.
- Streamlined design, smooth and elegant curves, stylish and classy outlook.
- Available in black and white, suitable for the decorative styles of different venues.
- Mesh: Made of 1060 pure aluminum, which is hardened and anti-oxidation treated, not easy to deform and never rust.
- Speaker box: Made of polymer engineering plastics, durable, safe and reliable.
- Speaker unit: The tweeter diaphragm is made of transparent silk membrane; the woofer diaphragm is made of polypropylene with large magnetic circuit.
- Mounting bracket: Cast aluminum molding, no oxidation and rust, safe and durable, multi-angle adjustment, easy to install and use.
- Waterproof level: IP66 waterproof level, all-weather design, to ensure the reliable use in indoor and outdoor environments.

Specification:

SKU	**TRIPLE-8**
Type	Wallmount Speaker
Rated Power	60W
Input Options	8Ohm / 100V
Transformer Taps 100V	3.8W / 7.5W / 15W / 30W / 60W
Ways	2
Drivers	8" weatherproof woofer
	1” silk tweeter
Effective frequency range	55 - 20KHz
Sound Pressure	106dB
Level Sensitivity	88dB, measured at 1W/m
Waterproof degree	IP66
Material	ABS enclosure, aluminum grille & aluminum mounting bracket
Operating Temperature	-20℃~+50℃
Finished colour	White (TRIPLE-8W), Black (TRIPLE-8B)
Mounting bracket	Included
Dimension	379×253×262mm (without bracket)
Weight	6.5kg

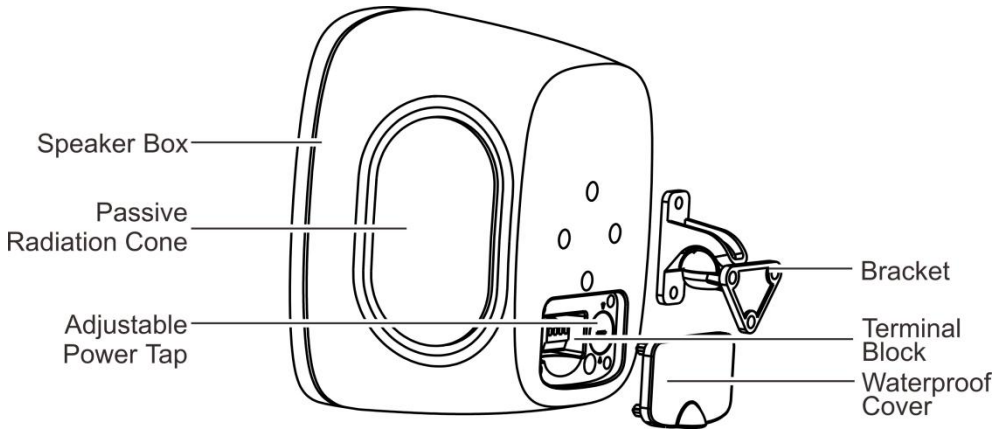

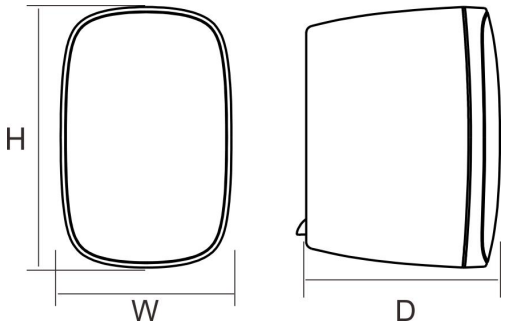

H	W	D
379mm	253mm	262mm

Frequency Response
(dB SPL, 1W, 1m)

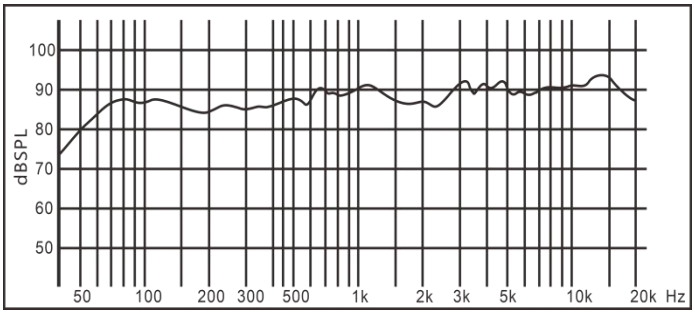

Distortion
(THD<3% 1W, 1m, 100Hz-10kHz)

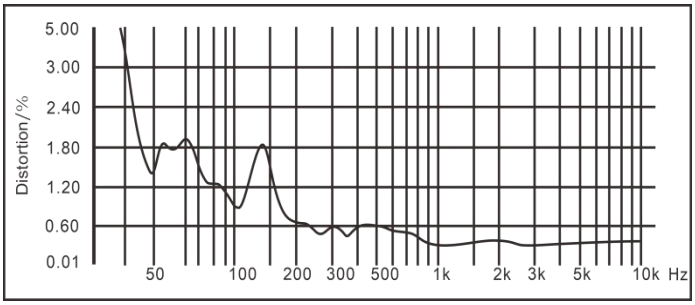

Vertical Directivity Pattern

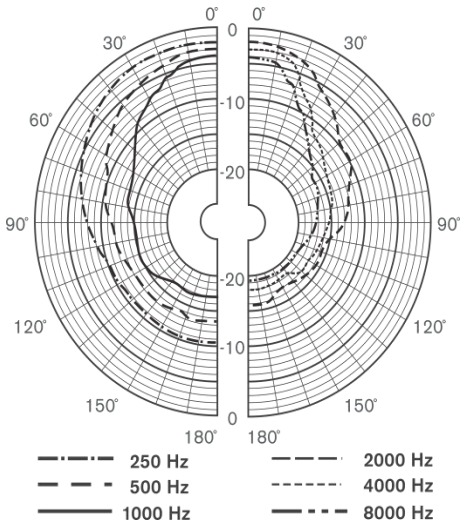

Horizontal Directivity Pattern

