ADERTECH

H1BT-U4H-70

HDMI 18Gbps Extender over Cat5e/Cat6

User Manual

VER:1.0

Thank you
for choosing ADERDECH products

We have done everything possible to ensure that our equipment pleases our consumers. When solving any problems in the operation and connection of ADERTECH equipment, it is best to contact authorized companies and specialists who work with our equipment. Our equipment is intended for professional use, so you have professional skills in using such equipment. ADERTECH is a manufacturer of a wide range of multimedia solutions.

Surge protection device recommended

This product contains sensitive electrical components that may be damaged by electrical spikes, surges, electric shock, lightning strikes, etc. Use of surge protection systems is highly recommended in order to protect and extend the life of your equipment.

Table of Contents

1. Introduction 3

2. Features 3

3. Package Contents 4

4. Specifications 4

5. Operation Controls and Functions 6

6. Connection Diagram 11

Caution

The extender must use direct interconnection method CAT cable.

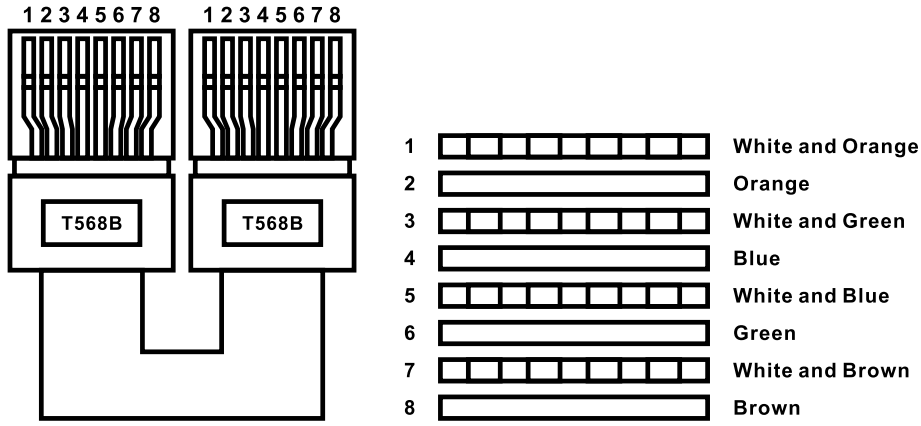

Direct interconnection method

The extender will go into protection mode automatically and no video out when using cross interconnection method CAT cable.

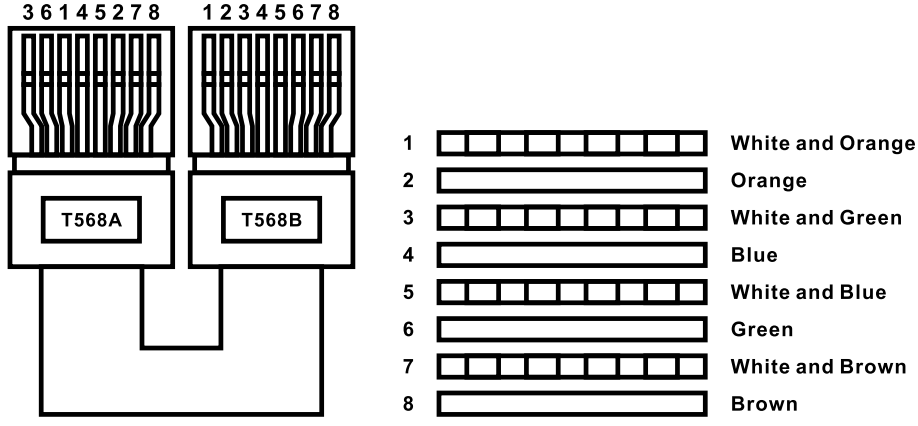

Cross interconnection method

1. Introduction

The 18Gbps HDMI Extender is a tool which can extend your HDMI signal over 230fts/70meters to a compatible display. It is designed to convert HDMI signal to standard HDBaseT signal which can be transmitted by LAN cable. It also supports Transfer Bidirectional Infrared control signal together with the HDMI signal, so you can control the Source in the Sink side which is 230fts outside, also you can control the Sink in the Source side which is 230fts outside by using the HDMI Extender.

2. Features

- ✧ HDMI 2.0b (18Gbps), HDCP 2.2 and DVI compliant
- ✧ Video resolutions up to 4K2K@50/60Hz (YUV444)
- ✧ 10bits HDR (High Dynamic Range) pass through
- ✧ Supports HDMI High Bit Rate(HBR) audio pass through
- ✧ Supports CEC bypass
- ✧ Optical audio supports LPCM 2CH, Dolby Digital 2/5.1CH, DTS 2/5.1CH
- ✧ POC (Power Over Cable) function is supported, either TX or RX is powered by 24V@1A power supply, the another does not need power supply from the DC jack. POC Power consumption is less than 10W.
  ※ See the description 1
- ✧ Transfer Bidirectional Infrared control signal together with the HDMI signal.
  ※ See the description 2.
- ✧ Transfer Bidirectional RS-232 control signal together with the HDMI signal.
  ※ See the description 3.

✧ Transmission distance: ※Over CAT6 cable
70 meters: 1080P @60Hz36bit; 3D1080P@30Hz36bit;
40 meters: 1080P @60Hz@48bit; 1080P @120Hz@24bit;
3D1080P@60Hz@36bit; 4K x 2K@30Hz@24bit.
4K2K@50/60Hz (YUV420), 4K2K@50/60Hz (YUV444)

3. Package Contents

- ✧ 1 x HDMI 18Gbps Transmitter
- ✧ 1 x HDMI 18Gbps Receiver
- ✧ 2 x Wideband IR Tx
- ✧ 2 x Wideband IR Rx
- ✧ 1 x 24V/1A Power Adaptor
- ✧ 1 x User Manual

4. Specifications

Technical	
HDMI Compliance	HDMI 2.0b
HDCP Compliance	HDCP 2.2 and HDCP 1.4
Video Bandwidth	18 Gbps
Video Resolutions	up to 4K2K@50/60Hz(YUV4:4:4),4K2K@30Hz,1080P@120Hz, and 1080P 3D@60Hz
Color Space	RGB, YCbCr 4:4:4, YCbCr 4:2:2
Color Depth	10-bit, 12-bit
HDMI Audio Formats (Pass-through)	LPCM 2/5.1/7.1CH, Dolby Digital, DTS 5.1, Dolby Digital+, Dolby TrueHD, DTS-HD Master Audio, Dolby Atmos, DTS:X

Optical Audio Formats	LPCM 2CH, LPCM 5.1, Dolby Digital 2/5.1CH, DTS 2/5.1CH
ESD Protection	Human body model — ±8kV (air-gap discharge) & ±4kV (contact discharge)
Connections	
Inputs	Transmitter: 1x HDMI Type A [19-pin female] 1x IR INPUT [3.5mm Stereo Mini-jack] 1x RS-232 [Phoenix jack] Receiver: 1x HDBaseT In [RJ45] 1x IR INPUT [3.5mm Stereo Mini-jack] 1x RS-232 [Phoenix jack]
Outputs	Transmitter: 1x HDBaseT Out [RJ45] 1x IR OUTPUT [3.5mm Stereo Mini-jack] Receiver: 1x HDMI Type A [19-pin female] 1x IR INPUT [3.5mm Stereo Mini-jack]
Mechanical	
Housing	Metal Enclosure
Color	Black
Dimensions	115mm [W] x65mm [D] x 17mm [H]
Weight	405g
Power Supply	Input: AC100 - 240V 50/60Hz Output: DC 24V/1A (US/EU standards, CE/FCC/UL certified)
Power Consumption	24W (Max)
Operation Temperature	32 - 104°F / 0 - 40°C
Storage temperature	-4 - 140°F / -20 - 60°C
Relative Humidity	20 - 90% RH (no condensation)

5. Operation Controls and Functions

5.1 Transmitter

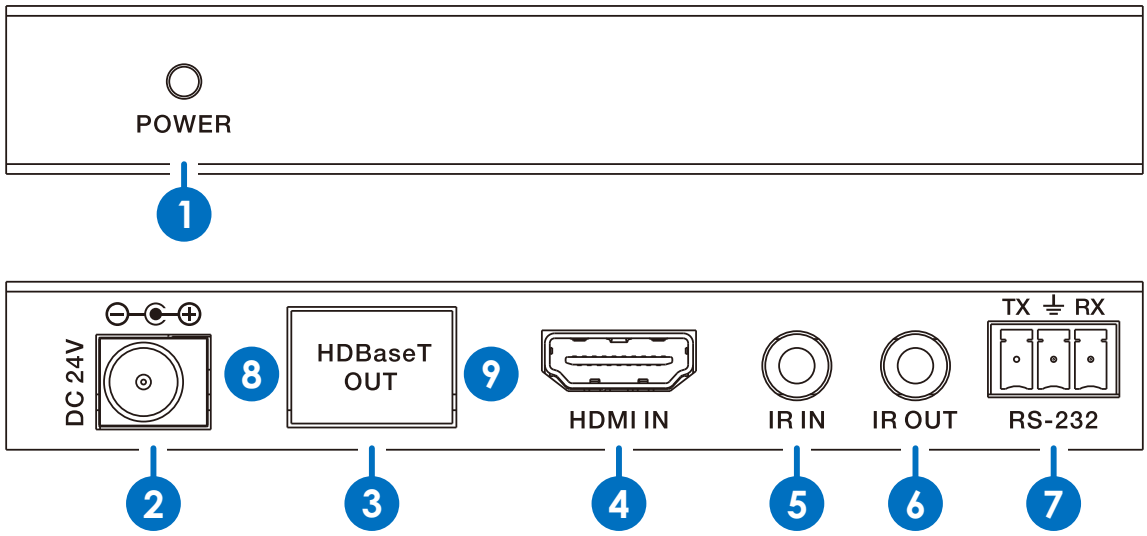

1. **Power LED:** System power indicator.
2. **DC 24V:** Connect 24V/1A adaptor to AC wall outlet for power supply.
3. **HD BaseT Out:** Standard HD BaseT signal output port. Connect HDBaseT receiver with a UTP cable following the standard of direct interconnection method
4. **HDMI In:** Connect this to HDMI source devices such as Blu-ray or PS4 player
5. **IR In:** Channel 2 IR Receiver. Connect with Wideband IR Rx.
6. **IR Out:** Channel 1 IR Transmitter. Connect with Wideband IR Tx.
7. **RS-232:** Phoenix jack provide Serial port control signal between transmitter and receiver.

8 Connection Signal Indicator Lamp

※Illuminate: The Transmitter and Receiver are in good connections status.

※Flashing: The Transmitter and Receiver are in poor connections status.

※Dark: The Transmitter and Receiver are not connected.

9 Data Signal Indicator Lamp

※Illuminate: The HDMI signal with HDCP.

※Flashing: The HDMI signal without HDCP.

※Dark: No HDMI signal.

5.2 Receiver

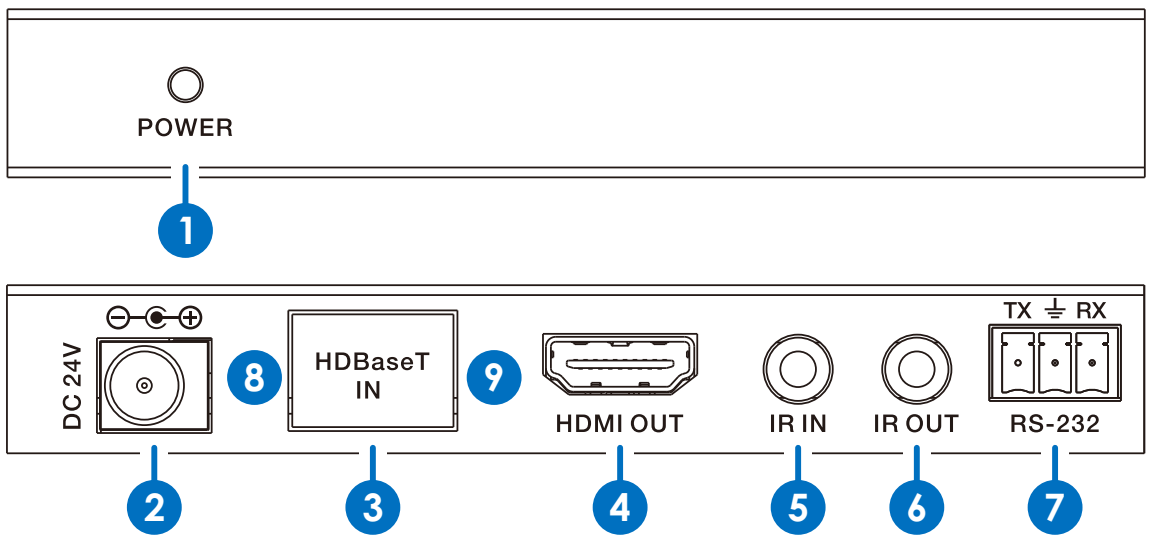

1 Power LED: System power indicator.

2 DC 24V: Connect 24V/1A adaptor to AC wall outlet for power supply.

3. **HDBaseT In:** Standard HD BaseT signal input port. Connect HDBaseT Transmitter with a UTP cable following the standard of direct interconnection method.
4. **HDMI Out:** HDMI output port. This slot is where you connect the HDTV or monitor with HDMI cable.
5. **IR In:** Channel 1 IR Receiver. Connect with Wideband IR Rx
6. **IR Out:** Channel 2 IR Transmitter. Connect with Wideband IR Tx.
7. **RS-232:** Phoenix jack provides serial port control signal between transmitter and receiver.
8. **Connection Signal Indicator Lamp**

   ※Illuminate: The Transmitter and Receiver are in good connections status.

   ※Flashing: The Transmitter and Receiver are in poor connections status.

   ※Dark: The Transmitter and Receiver are not connected.
9. **Data Signal Indicator Lamp**

   ※Illuminate: The HDMI signal with HDCP.

   ※Flashing: The HDMI signal without HDCP.

   ※Dark: No HDMI signal.

※ Description 1

POC (Power Over Cable) Application Example

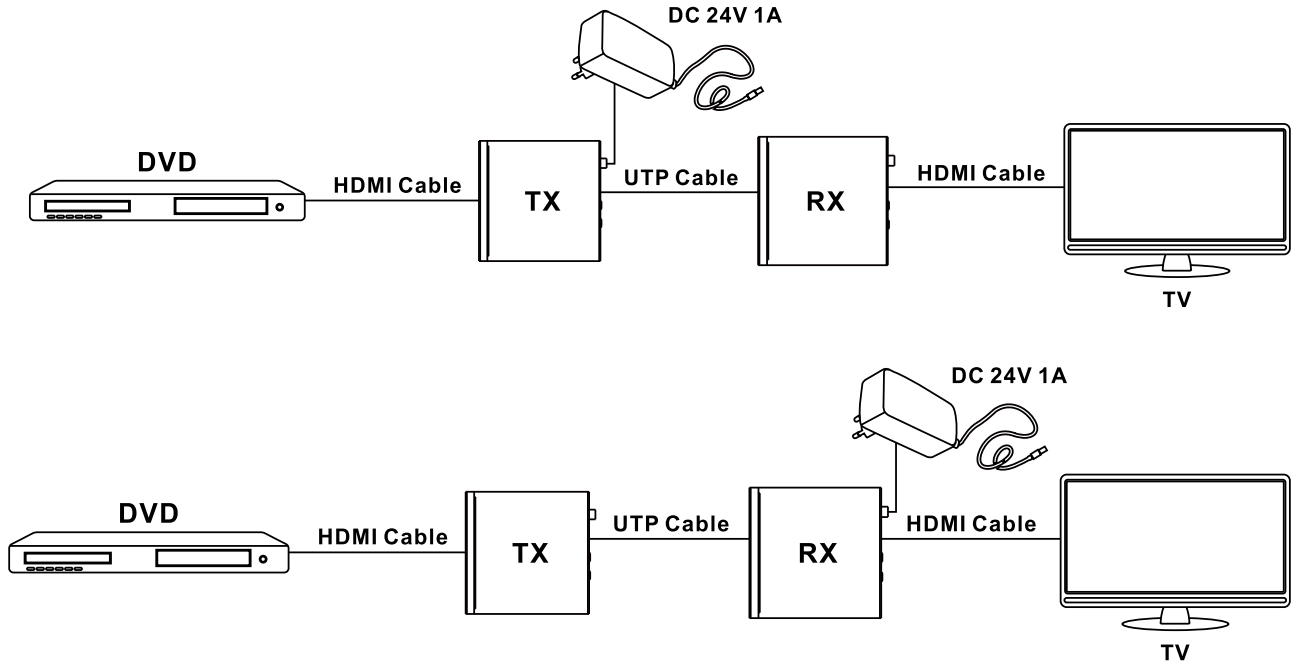

※ Description 2

Bidirectional Infrared control Application Example

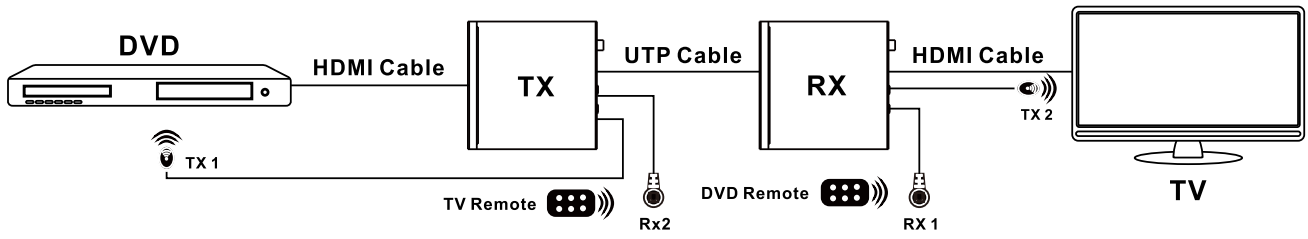

※ Description 3

Bidirectional RS-232 control Application Example

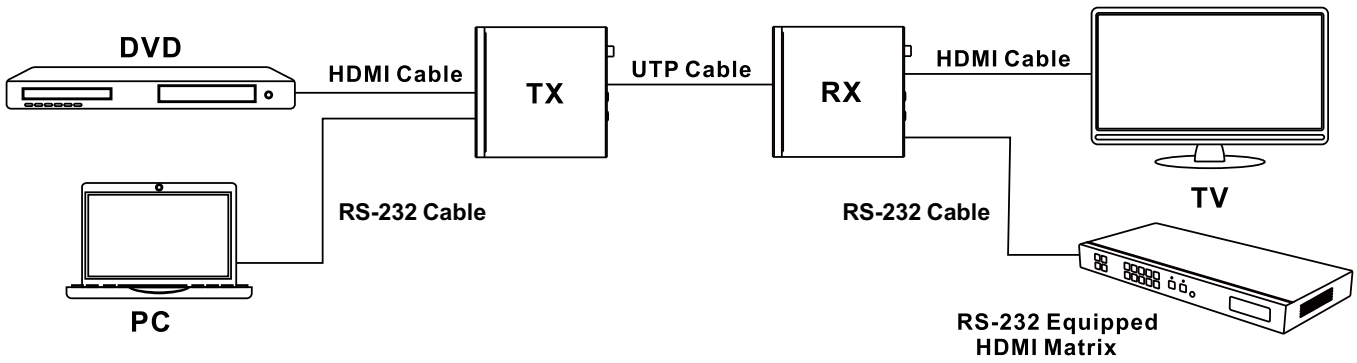

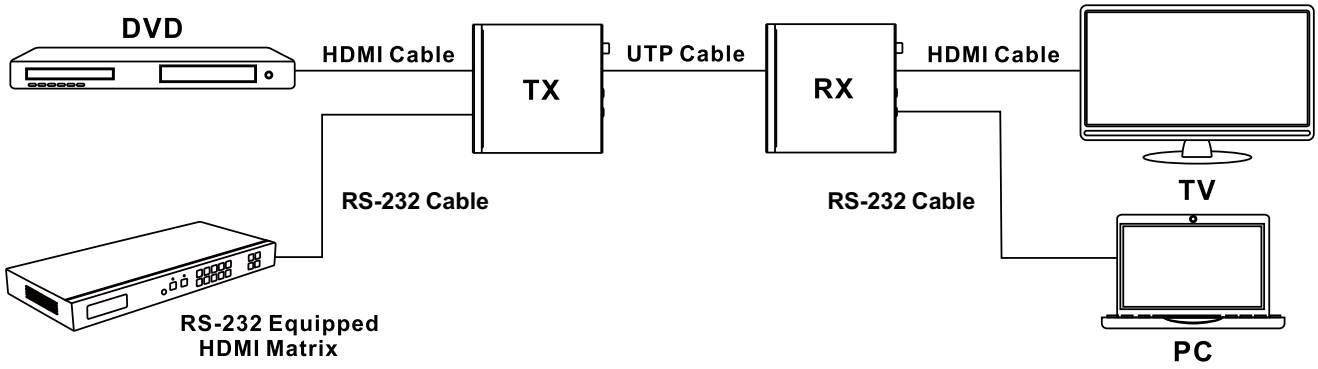

6.Connection Diagram

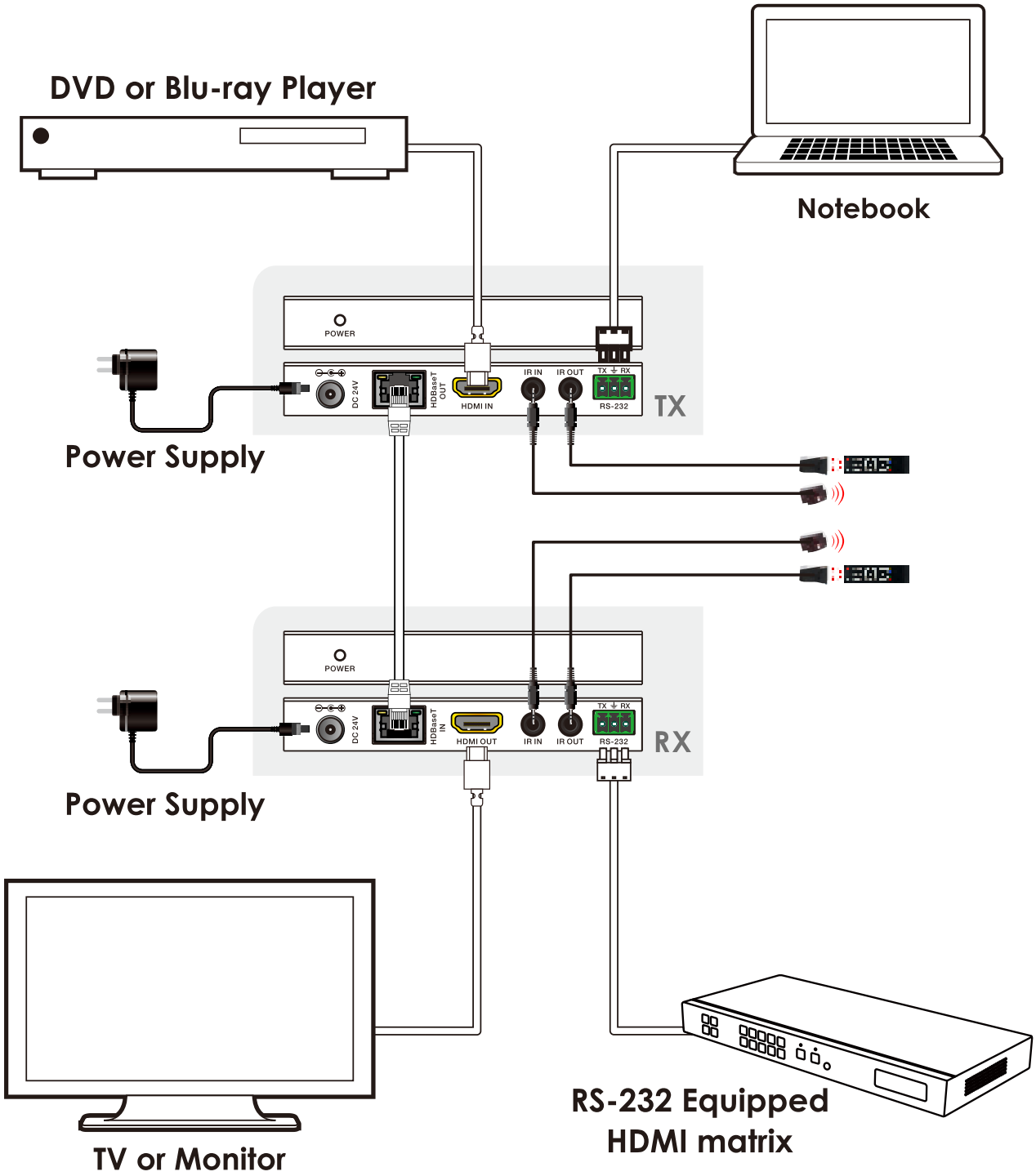

Quality Assurance

We have developed a strict quality assurance process and built a full-fledged testing laboratory. First-class high and low temperature laboratories, reliability and compatibility ensure that every product undergoes rigorous testing from design to delivery and is delivered free of defects.

After-sales service

We have established a complete after-sales warranty service system to respond to customer requirements in real time and quickly solve customer problems.

All trademarks are the property of their respective owners. ADERTECH is not responsible for any errors that may appear in this document publication. Product, pricing and feature information contained herein is subject to change without notice.

© 2023 ADERTECH Co Ltd.
The ADERTECH logo and associated visual identity are trademarks or registered trademarks of ADERTECH and/or its affiliates.