adertech

H1BT-U4H150A-14

18Gbps HDMI 1x4 HDBaseT Splitter with Four Resiever



USER manual

Thank you for purchasing this product

We have done everything possible to ensure that our equipment pleases our consumers. When solving any problems in the operation and connection of ADERTECH equipment, it is best to contact authorized companies and specialists who work with our equipment. Our equipment is intended for professional use, so you have professional skills in using such equipment. ADERTECH is a manufacturer of a wide range of multimedia solutions.

Surge protection device recommended

This product contains sensitive electrical components that may be damaged by electrical spikes, surges, electric shock, lighting strikes, etc. Use of surge protection systems is highly recommended in order to protect and extend the life of your equipment.

Table of Contents

1. Introduction..... 1
2. Features..... 1
3. Package Contents..... 1
4. Specifications..... 2
5. Operation Controls and Functions..... 3
   5.1 Transmitter..... 3
   5.2 HDBaseT Receiver..... 5
   5.3 IR Pin Definition..... 6
6. EDID Mode..... 7
7. ASCII Commands..... 8
8. Application Example..... 12

1. Introduction

This 18Gbps HDMI 1x4 HDBaseT Splitter can distribute 1 source signal to any 4 display devices. Support video resolution up to 4K2K@60Hz 4:4:4. It is designed with 1 HDMI loop output and 4 HDBaseT outputs. The HDMI signal transmission distance can be extended up to 120 meters at the resolution of 4K2K@60Hz, or 150 meters at 1080P@60Hz via a single CAT6/6a/7 cable. The product supports IR and RS-232 signal pass-through, audio extract function and advanced EDID management.

2. Features

- ☆ HDMI 2.0b, HDCP 2.2 and HDCP 1.x compliant
- ☆ Support 18Gbps video bandwidth
- ☆ Support video resolution up to 4K2K@60Hz 4:4:4
- ☆ Support HDR, HDR10+, HLG and Dolby vision
- ☆ Support up to 7.1CH HD audio pass-through
- ☆ Support digital and analog audio de-embedded output
- ☆ Extend the signal transmission distance up to 120 meters at the resolution of 4K2K@60Hz, 150 meters at 1080P@60Hz via a single CAT6/6a/7 cable
- ☆ Support 1 HDMI input, 1 HDMI loop output and 4 HDBaseT outputs.
- ☆ IR, RS-232 routed to HDBaseT output
- ☆ Advanced EDID management
- ☆ Support one-way POC function (only from transmitter to receiver)
- ☆ Compact design for easy and flexible installation

3. Package Contents

① 1 × 18Gbps HDMI 1×4 HDBaseT Splitter
② 4 × HDBaseT Receiver
③ 5 × IR Blaster Cable (1.5 meters)
④ 5 × 20K~60KHz IR Receiver Cable (1.5 meters)
⑤ 5 × 3-pin Phoenix Connector
⑥ 1 × 5-pin Phoenix Connector
⑦ 10 × Mounting Ear
⑧ 1 × 24V/2.7A DC Locking Power Adapter
⑨ 1 × User Manual

4. Specifications

Technical	
HDMI Compliance	HDMI 2.0b
HDCP Compliance	HDCP 2.2/1.x
Video Bandwidth	594MHz/18Gbps
Video Resolution	Up to 4k2k@60Hz 4:4:4
Color Depth	8-bit,10-bit,12-bit(1080p@60Hz) 8-bit (4K2K@60Hz YUV4:4:4) 8-bit,10-bit,12-bit(4K2K@60Hz YCbCr 4:2:2/4:2:0)
Color Space	RGB 4:4:4, YCbCr 4:4:4 / 4:2:2 / 4:2:0
HDR	Support HDR, HDR10+, HLG, Dolby vision
HDMI Audio Formats	LPCM 2.0/2.1/5.1/6.1/7.1, Dolby Digital, Dolby TrueHD, Dolby Digital Plus(DD+), DTS-ES, DTS HD Master, DTS HD-HRA, DTS-X
Coaxial Audio Formats	PCM2.0, Dolby Digital / Plus, DTS 2.0/5.1
Analog Audio Formats	PCM 2.0CH
ESD Protection	Human body model—±8kV (Air-gap discharge) & ±4kV (Contact discharge)
Connection	
Input	1×HDMI Type A (19-pin female)
Output	1×HDMI Type A (19-pin female) 4x HDBaseT OUT [RJ45] 1x Coaxial Audio OUT [RCA] 1x L/R Audio OUT [5-pin phoenix connector]
Control	1×RS-232 (3-pin phoenix connector) 1x EDID DIP switch [5-pin] 1x IR IN [3.5mm Stereo Mini-jack] 1x IR OUT [3.5mm Stereo Mini-jack]

Mechanical	
Housing	Metal Enclosure
Silkscreen Color	Black
Dimensions	Transmitter: 220mm (W) × 130mm (D) × 40mm (H) Receiver: 140mm (W) × 65mm (D) × 18mm (H)
Weight	Transmitter: 853g Receiver: 155g
Power Supply	Input: AC100 - 240V 50/60Hz, Output: DC 24V/2.7A (US/EU standards, CE/FCC/UL certified)
Power Consumption	35W
Operation Temperature	0°C ~ 40°C / 32°F ~ 104°F
Storage Temperature	-20°C ~ 60°C / -4°F ~ 140°F
Relative Humidity	20~90% RH (non-condensing)

5. Operation Controls and Functions

5.1 Transmitter

Front Panel

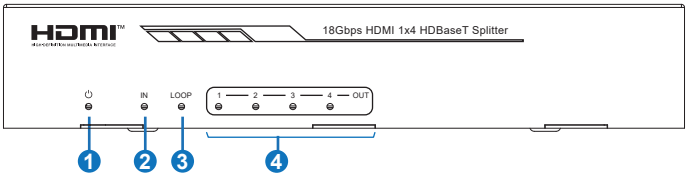

No.	Name	Function Description
1	POWER LED	When the device is powered on, the red power LED will be on.
2	IN LED	When the HDMI IN port connects an active source device, the green LED will be on.
3	LOOP LED	When the HDMI LOOP OUT port connects an active display device, the green LED will be on.
4	OUT(1~4) LED	When the HDBT OUTPUT port connects an HDBaseT Receiver, the corresponding green OUT LED will be on.

Rear Panel

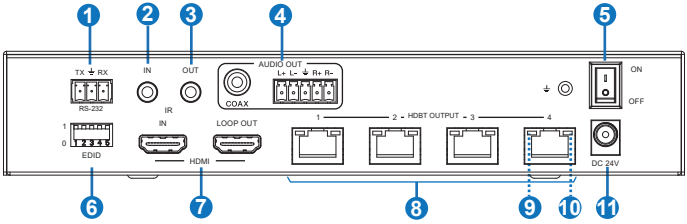

No.	Name	Function Description
1	RS-232	Connect to a PC or control system via a 3-pin phoenix connector cable for three functions: 1, Firmware update; 2, Control the Splitter via RS-232 commands; 3, RS-232 signal pass-through (from transmitter to receiver or from receiver to transmitter).
2	IR IN	Connect to IR receiver cable, the IR receive signal will emit to “IR OUT” port of the HDBaseT Receiver.
3	IR OUT	Connect to IR blaster cable, the IR emit signal is from “IR IN” port of the HDBaseT Receiver.
4	AUDIO OUT (COAX, L/R)	Coaxial/balanced audio output port, connect to amplifier or speaker.
5	POWER switch	Press this switch to power on/off the device.
6	EDID DIP switch	Used to set EDID mode. Please refer to Section “6. EDID Mode” for details.
7	HDMI port	IN: HDMI input port, connect to HDMI source device such as DVD or set-top box with an HDMI cable. LOOP OUT: HDMI loop output port, connect to the HDMI display device such as TV or Monitor with an HDMI cable.
8	HDBT OUTPUT port (1~4)	Connect to the HDBT IN port of the HDBaseT receiver with a CAT cable.
9	Connection Signal Indicator lamp (Green)	▪ Illuminating: Transmitter and Receiver are in good connection status. ▪ Flashing: Transmitter and Receiver are in poor connection status. ▪ Dark: Transmitter and Receiver are not connected.

10	Data Signal Indicator lamp (Orange)	▪ Illuminating: HDMI signal with HDCP. ▪ Flashing: HDMI signal without HDCP. ▪ Dark: No HDMI signal.
11	DC 24V	Plug the DC 24V power supply into the unit and connect the adaptor to an AC outlet. (**Note:** The transmitter can power the receiver via a CAT cable.)

5.2 HDBaseT Receiver

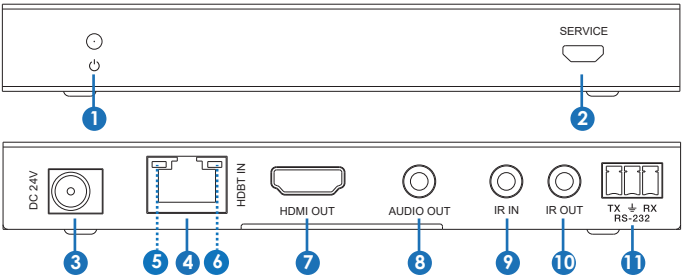

No.	Name	Function Description
1	Power Indicator	When the receiver is powered on, the power indicator will be on.
2	SERVICE port	Used for firmware update.
3	DC 24V	Plug DC 24V/1A power supply into the unit and connect the adapter to an AC outlet. (**Note:** The HDBaseT receiver also can be powered by the transmitter via a CAT cable.)
4	HDBT IN	Connect to the HDBT OUTPUT port on the transmitter with a CAT cable.
5	Connection Signal Indicator lamp (Green)	▪ Illuminating: Transmitter and Receiver are in good connection status. ▪ Flashing: Transmitter and Receiver are in poor connection status. ▪ Dark: Transmitter and Receiver are not connected.
6	Data Signal Indicator lamp (Orange)	▪ Illuminating: HDMI signal with HDCP. ▪ Flashing: HDMI signal without HDCP. ▪ Dark: No HDMI signal.
7	HDMI OUT	HDMI output port, connect to HDMI display device such as TV or Projector with an HDMI cable.

8	AUDIO OUT	Audio output port, connect to amplifer or speaker.
9	IR IN	Connect to the IR Receiver cable. The IR signal will send to the IR OUT port of the transmitter.
10	IR OUT	Connect to the IR blaster cable, the IR signal is from IR IN port of the transmitter.
11	RS-232	3-pin Phoenix connector for RS-232 command transmission. The RS-232 command will pass-through from transmitter to receiver or from receiver to transmitter.

5.3 IR Pin Definition



IR Receiver



IR Blaster

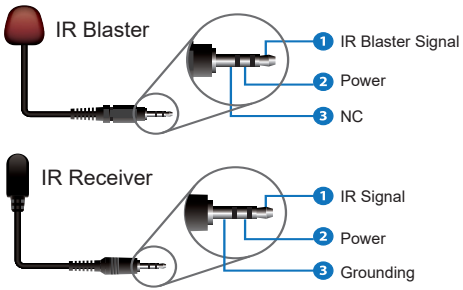

Note: When the angle between the IR receiver and the remote control is ± 45 °, the transmission distance is 0-5 meters; when the angle between the IR receiver and the remote control is ± 90 °, the transmission distance is 0-8 meters.

6. EDID Mode

The defined EDID setting list of the product is shown as below:

EDID Mode	EDID Description
11111	1080P, Stereo Audio 2.0
11110	1080P, Dolby/DTS 5.1
11101	1080P, HD Audio 7.1
11100	1080I, Stereo Audio 2.0
11011	1080I, Dolby/DTS 5.1
11010	1080I, HD Audio 7.1
11001	1080P 3D, Stereo Audio 2.0
11000	1080P 3D, Dolby/DTS 5.1
10111	1080P 3D, HD Audio 7.1
10110	4K2K30Hz_444, Stereo Audio 2.0
10101	4K2K30Hz_444, Dolby/DTS 5.1
10100	4K2K30Hz_444, HD Audio 7.1
10011	4K2K60Hz_420, Stereo Audio 2.0
10010	4K2K60Hz_420, Dolby/DTS 5.1
10001	4K2K60Hz_420, HD Audio 7.1
10000	4K2K60Hz_444, Stereo Audio 2.0
01111	4K2K60Hz_444, Dolby/DTS 5.1
01110	4K2K60Hz_444, HD Audio 7.1
01101	4K2K60Hz_444, Stereo Audio 2.0 HDR
01100	4K2K60Hz_444, Dolby/DTS 5.1 HDR
01011	4K2K60Hz_444, HD Audio 7.1HDR
01010	COPY_FROM_LOOP OUT
01001	COPY_FROM_HDBT OUT1
01000	COPY_FROM_HDBT OUT2
00111	COPY_FROM_HDBT OUT3
00110	COPY_FROM_HDBT OUT4
00101	1080P, Stereo Audio 2.0
00100	1080P, Stereo Audio 2.0
00011	1080P, Stereo Audio 2.0
00010	1080P, Stereo Audio 2.0
00001	1080P, Stereo Audio 2.0
00000	PC control mode

7. ASCII Commands

The product also supports ASCII command control. Connect the RS-232 port of the product to a PC with a 3-pin phoenix connector cable. Then, open a Serial Command tool on PC to send ASCII commands to control the product. The ASCII command list about the product is shown as below.

ASCII Commands

Serial port protocol. Baud rate: 115200, Data bits: 8bit, Stop bits:1, Check bit: 0

x - Parameter 1
y - Parameter 2
! - Delimiter

Command Code	Function Description	Example	Feedback	Default Setting
Power				
s power z!	Power on/off the device,z=0~1 (z=0 power off, z=1 power on)	s power 1!	Power on System Initializing... Initialization Finished! FW version x.xx.xx	power on
r power!	Get current power state	r power!	power on/power off	
s reboot!	Reboot the device	s reboot!	Reboot… System Initializing... Initialization Finished! FW version x.xx.xx	
System Setup				
help!	List all commands	help!		
r type!	Get device model	r type!	H1BT-U4H150A-14	
r status!	Get device current status	r status!	Get the unit all status: power, in/out connection, edid mode	
r fw version!	Get Firmware version	r fw version!	MCU BOOT: Vx.xx.xx MCU APP: Vx.xx.xx	
r link in!	Get the connection status of the input port	r link in!	HDMI IN: connect	
r link out y!	Get the connection status of the y output port, y=0~5(0=all, 1~4=HDBT 1~4, 5 = loop out)	r link out 1!	hdmi loop out: connect hdbt output 1: connect	
s reset!	Reset to factory defaults	s reset!	Reset to factory defaults System Initializing... Initialization Finished! FW version x.xx.xx	

Command Code	Function Description	Example	Feedback	Default Setting
Output Setting				
s hdmi stream z!	Set hdmi loop output stream on/off z=0~1(0:disable,1:enable)	s hdmi stream 1 !	Enable hdmi loop out stream Disable hdmi loop out stream	enable
s hdmi hdcp z!	Set hdmi loop output hdcp on/off z=0~1(0:disable,1:enable)	s hdmi hdcp 1!	Enable hdmi loop out hdcp Disable hdmi loop out hdcp	enable
s hdbt y hdcp z!	Set hdbt output y hdcp on/off, y=0~4(0=all) z=0~1(0:disable, 1:enable)	s hdbt 1 hdcp 1 ! s hdbt 0 hdcp 1 !	Enable hdbt output 1 hdcp Disable hdbt output 1 hdcp Enable hdbt all outputs hdcp Disable hdbt all outputs hdcp	enable
s hdbt y stream z!	Set hdbt output y stream on/off, y=0~4(0=all) z=0~1 (0:disable,1:enable)	s hdbt 1 stream 1 ! s hdbt 0 stream 1 !	Enable hdbt output 1 stream Disable hdbt output 1 stream Enable hdbt all outputs stream Disable hdbt all outputs stream	enable
r hdmi stream!	Get hdmi loop out stream status	r hdmi stream!	Enable hdmi output stream	
r hdmi hdcp!	Get hdmi loop out hdcp status	r hdmi hdcp!	Enable hdmi output hdcp	
r hdbt y hdcp!	Get hdbt output y hdcp status, y=0~4(0=all)	r hdbt 1 hdcp!	Enable hdbt output 1 hdcp	
r hdbt stream!	Get hdbt output y stream status, y=0~4(0=all)	r hdbt 1 stream!	Enable hdbt output 1 stream	

Command Code	Function Description	Example	Feedback	Default Setting
EDID Setting				
s edid in from z!	Set input EDID from default EDID z, z=1~27 1, 1080p,Stereo Audio 2.0 2, 1080p,Dolby/DTS 5.1 3, 1080p,HD Audio 7.1 4, 1080i,Stereo Audio 2.0 5, 1080i,Dolby/DTS 5.1 6, 1080i,HD Audio 7.1 7, 3D,Stereo Audio 2.0 8, 3D,Dolby/DTS 5.1 9, 3D,HD Audio 7.1 10, 4K2K30_444, Stereo Audio 2.0 11, 4K2K30_444,Dolby/DTS 5.1 12, 4K2K30_444,HD Audio 7.1 13, 4K2K60_420, Stereo Audio 2.0 14, 4K2K60_420, Dolby/DTS 5.1 15, 4K2K60_420,HD Audio 7.1 16, 4K2K60_444, Stereo Audio 2.0 17, 4K2K60_444, Dolby/DTS 5.1 18, 4K2K60_444,HD Audio 7.1 19, 4K2K60_444, Stereo Audio 2.0 HDR 20, 4K2K60_444, Dolby/DTS 5.1 HDR 21, 4K2K60_444, HD Audio 7.1 HDR 22, copy from hdmi loop out 23, copy from hdbt output 1 24, copy from hdbt output 2 25, copy from hdbt output 3 26, copy from hdbt output 4 27, use user1 EDID	s edid in from 1!	input EDID:1080p, Stereo Audio 2.0 Please toggle EDID dip switch to 00000!	1080p,Stereo Audio 2.0
s edid user1 00 FF FF FF FF …!	Set user1 EDID data	s edid user1 00 ff ff ff ff …. !	user1 EDID data: 00 FF FF ….	
r edid user1!	Get user1 EDID data	r edid user1!	user1 EDID data : 00 FF FF FF FF FF FF 00 ……	
r edid in!	Get EDID status of the input	r edid in!	input EDID: 4K2K60_444,Stereo Audio 2.0	
r edid in data!	Get the EDID data of the hdmi input	r edid in data!	EDID data : 00 FF FF FF FF FF FF 00 ……	

Command Code	Function Description	Example	Feedback	Default Setting
RS-232 BYPASS Setting				
s rs232 bypass hdbt y!	Set RS-232 port connect to HDBT out1 Receiver RS-232 port, y=0~5(0=all, 1~4= hdbt out 1~4 5=NC)	s rs232 bypass hdbt 1!	RS-232 connect to HDBT OUT1 RS-232 not connect to HDBT OUT	y=0
r rs232 bypass!	Get RS-232 port connect to HDBT out receiver RS-232 port	r rs232 bypass!	RS-232 connect to HDBT OUT1 RS-232 connect to all HDBT OUT RS-232 not connect to HDBT OUT	
s device baud w size x stop y parity z!	Set receiver control device COM port setting, w=2400, 4800,9600,19200,38400, 57600,115200, x=7,8 y=1,2, z=none, even,odd	s device baud 57600 size 8 stop 1 parity none!	receiver device COM port setting baudrate: 57600 data size :8, stop:1 parity: none	
s rs232 time x!	set send RS232 command wait time x=200~5000ms	s rs232 time 200!	send RS-232 command wait time 200ms	200ms

8. Application Example

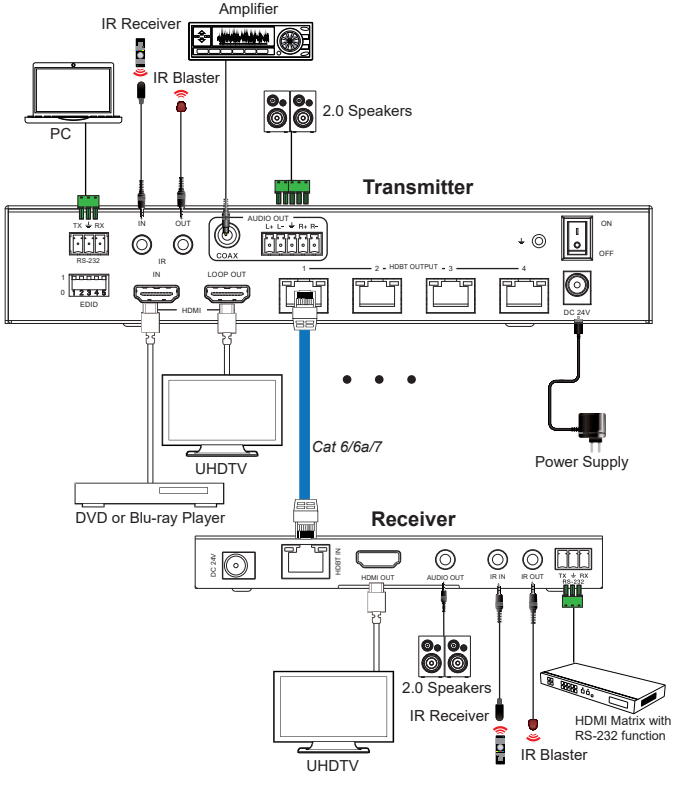

All trademarks are the property of their respective owners. ADERTECH is not responsible for any errors that may appear in this document publication. Product, pricing and feature information contained herein is subject to change without notice.
© 2023 ADERTECH Co Ltd.
The ADERTECH logo and associated visual identity are trademarks or registered trademarks of ADERTECH and/or its affiliates.