adertech

EXT-UB32CH-TR

USB 3.2 Gen 1 Extender with Dual USB-C In and Video Out



User manual

VER 1.0

Thank you for purchasing this product

We have done everything possible to ensure that our equipment pleases our consumers. When solving any problems in the operation and connection ADERTECH equipment, it is best to contact authorized companies and specialists who work with our equipment. Our equipment is intended for professional use, so you have professional skills in using such equipment. ADERTECH is a manufacturer of a wide range of multimedia solutions.

Surge protection device recommended

This product contains sensitive electrical components that may be damaged by electrical spikes, surges, electric shock, lighting strikes, etc. Use of surge protection systems is highly recommended in order to protect and extend the life of your equipment.

Table of Contents

1. Introduction 1
2. Features 1
3. Package Contents 1
4. Specifications 2
5. Operation Controls and Functions 3
5.1 Transmitter Panel 3
5.2 Receiver Panel 5
6. API Commands 6
7. Application Example 9

1. Introduction

This USB Extender can extend USB 3.2 Gen 1 5Gbps signal to a distance up to 100m/328ft via a single CAT6a cable. The transmitter features two USB-C selectable host ports with charging, one USB-C and two USB-A device ports. The receiver features one USB-C and two USB-A device ports, and two HDMI™ output ports. This extender supports auto and manual switching for the two host ports. Bi-directional 24V PoC (Power over Cable) allows user only to provide power supply to the transmitter side or the receiver side.

It can be widely used for long distance USB and video signal transmission between USB sources and devices like webcams, PTZ cameras, keyboards, mouse devices, USB microphones, flash sticks, printers, scanners, touch panel displays and other USB devices.

2. Features

- ☆ Extension of USB 3.2 Gen 1 up to 100m/328ft via CAT6a cable
- ☆ USB 3.2 Gen 1 connectivity with data transfer rate up to 5Gbps
- ☆ Backwards compatible with USB 2.0 and 1.1
- ☆ Hardware acceleration for isochronous and bulk transfer
- ☆ TX features two USB-C input ports sharing up to 100W charging (1x100W or 2x50W)
- ☆ TX supports auto and manual switching for the two up-stream host ports, via switch button or API commands
- ☆ RX features two HDMI™ outputs for dual screen extension display, with resolution up to 4K@60Hz
- ☆ RX supports audio de-embedding to balanced/unbalanced audio output
- ☆ RS-232 pass-through and API control
- ☆ Firmware upgrade via USB-C service port
- ☆ FSYNC GPIO pass-through for industry camera use
- ☆ Bi-directional 24V PoC (power over cable), when TX or RX gets power, the other end does not need an external power supply
  Note: USB-C charging is supported only when TX gets power supply.

3. Package Contents

① 1× USB 3.2 Gen 1 Extender (TX)
② 1× USB 3.2 Gen 1 Extender (RX)
③ 1× 24V/7.5A Locking Power Supply
④ 2× 4pin-3.5mm Phoenix Connector
⑤ 1× 5pin-3.5mm Phoenix Connector
⑥ 4× Mounting Ear
⑦ 8× Machine Screw (KM3*4)
⑧ 1× User Manual

4. Specifications

Technical	
USB Protocol	USB 3.2 Gen 1
Transmission Rate	Up to 5Gbps
HDCP Compliance	HDCP 2.2
HDMI™ Compliance	HDMI™ 2.0b
HDMI™ Video Bandwidth	18Gbps
HDMI ™Video Resolution	Up to 4K@60Hz
Color Depth	8/10/12-bit
Color Space	RGB, YCbCr_4:4:4, YCbCr_4:2:2, YCbCr_4:2:0
Audio Format	**HDMI™ Audio:** Up to LPCM 2.0/5.1CH **Analog Audio De-embedding:** LPCM 2CH (sample rate 32~192kHz)
Transmission Distance	100m/328ft via CAT6a (F/FTP) cable 1.5m/4.9ft via USB cable 3m/9.8ft via HDMI™ passive cable
ESD Protection	IEC 61000-4-2: ±8kV (Air-gap discharge), ±4kV (Contact discharge)
Connections	
Transmitter	Input: 2× USB-C HOST [USB Type C, 24-pin female] Output: 2× USB-A DEVICE [USB Type A, 9-pin female] 1× USB-C DEVICE [USB Type C, 24-pin female] 1× HDBT-USB3 [RJ45 connector, 24V PoC] Control: 1× RS-232 [3pin-3.5mm phoenix connector] 1× FSYNC [1pin-3.5mm phoenix connector] 1× SERVICE [USB Type C, firmware update port]
Receiver	Input: 1× HDBT-USB3 [RJ45 connector, 24V PoC] Output: 2× USB-A DEVICE [USB Type A, 9-pin female] 1× USB-C DEVICE [USB Type C, 24-pin female] 2× HDMI™ OUT [Type A, 19-pin female] 1× AUDIO OUT [5pin-3.5mm phoenix connector] Control: 1× RS-232 [3pin-3.5mm phoenix connector] 1× FSYNC [1pin-3.5mm phoenix connector] 1× SERVICE [USB Type C, firmware update port]

Mechanical	
Housing	Metal Enclosure
Color	Black
Dimensions	Transmitter: 180mm [W] × 95mm [D] × 23mm [H] Receiver: 180mm [W] × 95mm [D] × 23mm [H]
Weight	Transmitter: 482g; Receiver: 486g
Power Supply	Input: AC 100~240V 50/60Hz; Output: DC 24V/7.5A (US/EU standards, CE/FCC/UL certified)
Power Consumption	Transmitter: 120W (Including PD 100W, Max); Receiver: 19.44W (Max)
Operating Temperature	0°C ~ 45°C / 32°F ~ 113°F
Storage Temperature	-40°C ~ 60°C / -40°F ~ 140°F
Operating Humidity	20%~80% relative humidity, non-condensing
Storage Humidity	10%~90% relative humidity, non-condensing

5. Operation Controls and Functions

5.1 Transmitter Panel

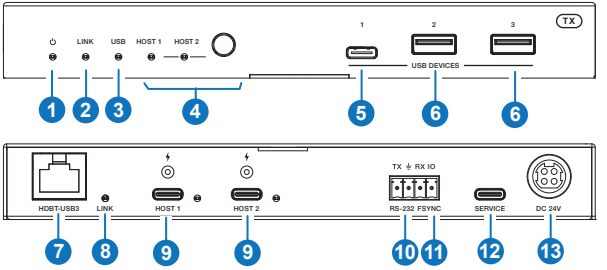

No.	Name	Function Description
1	Power LED	The red LED will be on when the transmitter is powered on.
2	LINK LED	Connection signal indicator. ▪ **On:** Transmitter and Receiver are connected and linked. ▪ **Off:** Transmitter and Receiver are not connected.
3	USB LED	USB signal indicator. ▪ **On:** USB 3.0 signal is detected. ▪ **Blinking:** USB 2.0 signal is detected. ▪ **Off:** USB signal is not detected.
4	HOST switch button & LED	The button is used to switch between HOST 1 and HOST 2. When HOST 1/2 is selected, the corresponding LED will be on.
5	USB-C DEVICE	Downstream USB-C port, with output power up to 5V/1A. Connects to USB device such as U disk or hard disk.
6	USB-A DEVICE	Downstream USB-A ports, with output power up to 5V/1.5A. Connect to USB devices such as U disk or hard disk.
7	HDBT-USB3	Connects to the HDBT-USB3 port on RX with CAT6a cable. It can also be used for 24V PoC power supply.
8	LINK LED	Connection signal indicator. ▪ **On:** Transmitter and Receiver are connected and linked. ▪ **Off:** Transmitter and Receiver are not connected.
9	USB-C HOST ports & LEDs (1/2)	Upstream USB-C ports, connected to PCs or hosts. Support up to PD100W charging. **Note:** If the two hosts are used for charging at the same time, the power output of each host is up to 50W. When HOST 1/2 is selected as input channel, the corresponding LED will be on.
10	RS-232	3pin phoenix connector, connected to a PC or control system for RS-232 signal pass-through and API commands control.
11	FSYNC	FSYNC port, the level pass through from Transmitter to Receiver, to synchronize the external devices. Default level range is 0~5V.
12	SERVICE	USB 2.0 port, used for firmware upgrade.
13	DC 24V	DC 24V/7.5A power input port.

5.2 Receiver Panel

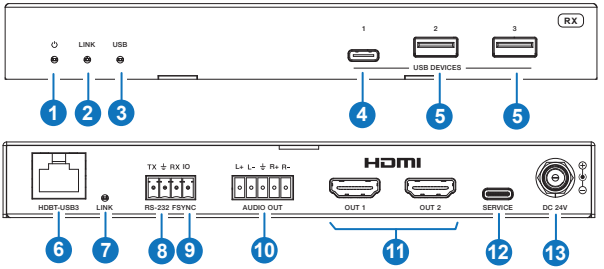

No.	Name	Function Description
1	Power LED	The red LED will be on when the receiver is powered on.
2	LINK LED	Connection signal indicator. ▪ **On:** Transmitter and Receiver are connected and linked. ▪ **Off:** Transmitter and Receiver are not connected.
3	USB LED	USB signal indicator. ▪ **On:** USB 3.0 signal is detected. ▪ **Blinking:** USB 2.0 signal is detected. ▪ **Off:** USB signal is not detected.
4	USB-C DEVICE	Downstream USB-C port, with output power up to 5V/1A. Connects to USB device such as U disk or hard disk.
5	USB-A DEVICE	Downstream USB-A ports, with output power up to 5V/1.5A. Connect to USB devices such as U disk or hard disk.
6	HDBT-USB3	Connects to the HDBT-USB3 port on TX with CAT6a cable. It can also be used for 24V PoC power supply.
7	LINK LED	Connection signal indicator. ▪ **On:** Transmitter and Receiver are connected and linked. ▪ **Off:** Transmitter and Receiver are not connected.
8	RS-232	3pin phoenix connector, connected to a PC or control system for RS-232 signal pass-through and API commands control.
9	FSYNC	FSYNC port, the level pass through from TX to RX, to synchronize the external devices. Default level range is 0~5V.

10	AUDIO OUT	Analog audio output port, supporting balanced audio output (with a maximum support of 2Vrms) and unbalanced audio output (with a maximum support of 1Vrms). Balanced connection method: L+, L -, ⏚, R+, R Unbalanced connection method: L+, ⏚, R+
11	HDMI OUT	HDMI output ports, connected to HDMI display devices such as TV or monitor. **Note:** Please install the latest version of the driver, otherwise, there will be something wrong with the HDMI signal output. **Download URL:** *http://www.synaptics.com/products/displaylink-graphics/downloads*
12	SERVICE	USB 2.0 port, used for firmware upgrade.
13	DC 24V	DC 24V/3.75A power input port.

6. API Commands

The product supports API commands control. Connect the SERVICE or RS-232 port of the product to a PC, then open a Serial Command tool on PC to send API commands to control the product. The API commands list is shown below.

ASCII Commands

1. Service port (USB-C virtual RS-232) communication protocol (Internal debug)
   Baud rate: 115200 (fixed), Data bit: 8, Stop bit: 1, Parity bit: none
2. Phoenix RS-232 port communication protocol (Connect to control system)
   Baud rate: 4800~115200 (configurable), Data bit: 8, Stop bit: 1, Parity bit: none

Command	Function	Example	Feedback	Default
?	Get the list of all commands	?		
help	Get the list of all commands	help		
get fw version	Get firmware version	get fw version	TX FW 1.0.0 RX FW 1.0.0	
set reboot	Reboot the device	set reboot	Reboot… System Initializing... Initialization Finished! TX FW 1.0.0	

Command	Function	Example	Feedback	Default
set reset	Reset to factory defaults	set reset	Sure to RESET to default settings? Type "Yes" after next prompt to confirm…	
get status	Get system status	get status	Please refer to the note at the end of the list.	
set key on/off	Set front panel key on/off	set key on set key off	Set key on Set key off	on
get key	Get front panel key on/off status	get key	Key on	
set baud x	Set RS-232 baud rate to x bps x=1: 4800 x=2: 9600 x=3: 19200 x=4: 38400 x=5: 57600 x=6: 115200	set baud 6	Set baud rate 115200	115200
get baud	Get RS-232 baud rate	get baud	Baud rate 115200	
get usb5v x	Get USB host input port 5V (x=0~2) x=0: all USB host inputs x=1: USB host 1 (USBC) x=2: USB host 2 (USBC)	get usb5v 0	USB host 1: 5V USB host 2: none	
set autoswitch x	Set auto-switching on/off (USB 5V detection) x=On, Off	set autoswitch on	Set autoswitch on	on
get autoswitch	Get auto-switching status	get autoswitch	Autoswitch on	
set tx usbd x power y	Set TX USB device ports (x=0~3) power to (y=0~2) x=0: TX all USB device ports x=1: TX USB device 1 (USBC) x=2: TX USB device 2 (USBA) x=3: TX USB device 3 (USBA) y=0: Force power off y=1: Follow USB host power y=2: Force power on	set tx usbd 0 power 1	Set TX all USB device ports power follow USB host power	1
get tx usbd x power	Get TX USB device ports (x=0~3) power status x=0: TX all USB device ports x=1: TX USB device 1 (USBC) x=2: TX USB device 2 (USBA) x=3: TX USB device 3 (USBA)	get tx usbd 0 power	TX all USB device ports power follow USB host power	

Command	Function	Example	Feedback	Default
set rx usbd x power y	Set RX USB device ports (x=0~3) power to (y=0~2) x=0: RX all USB device ports x=1: RX USB device 1 (USBC) x=2: RX USB device 2 (USBA) x=3: RX USB device 3 (USBA) y=0: Force power off y=1: Follow USB host power y=2: Force power on	set rx usbd 0 power 1	Set RX all USB device ports power follow USB host power	1
get rx usbd x power	Get RX USB device ports (x=0~3) power status x=0: RX all USB device ports x=1: RX USB device 1 (USBC) x=2: RX USB device 2 (USBA) x=3: RX USB device 3 (USBA)	get rx usbd 0 power	RX all USB device ports power follow USB host power	
set hdbt update	Set service port to HDBT UART for FW update	set hdbt update	HDBT update	
set input x	Set USB host input port (x=1~2) x=1: USB host 1 (USBC) x=2: USB host 2 (USBC)	set input 1	Set input USB host 1	1
get input	Get USB host input port	get input	Input USB host 1	

Note: The feedback of the command of “get status” is as follow.

```
==========================================================================
Status Info 2-Port USB 3.2 Gen 1 Extender
TX_FW 1.0.0 RX_FW 1.0.0
Source    Key       Baud      Autoswitch
01        On        115200    On
Input     USB_Power
01        5V
02        None
Output    USB_Power
TX_01     Follow_Input
TX_02     Follow_Input
TX_03     Follow_Input
RX_01     Follow_Input
RX_02     Follow_Input
RX_03     Force_On
==========================================================================
```

7. Application Example

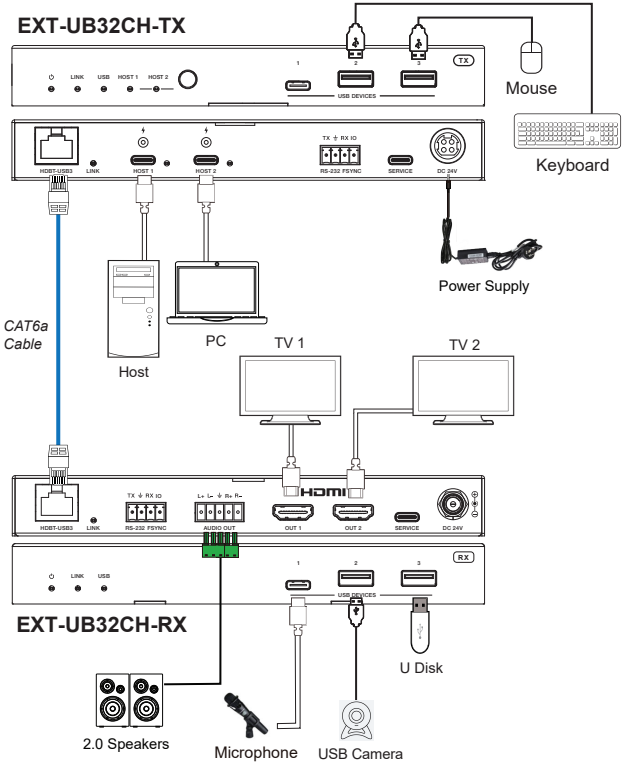

All trademarks are the property of their respective owners. ADERTECH is not responsible for any errors that may appear in this document.publication. Product, pricing and feature information contained herein is subject to change without notice.

© 2023 ADERTECH Co Ltd. The ADERTECH logo and associated visual identity are trademarks or registered trademarks of ADERTECH and/or its affiliates