ADERTECH

VC-U4H-HA



18Gbps UHD HDMI Audio De-Embedder
User Manual Version 1.1

Thank you for choosing ADERTECH products

We have done everything possible to ensure that our equipment pleases our consumers. When solving any problems in the operation and connection of ADERTECH equipment, it is best to contact authorized companies and specialists who work with our equipment. Our equipment is intended for professional use, so you have professional skills in using such equipment. ADERTECH is a manufacturer of a wide range of multimedia solutions.

Surge protection device recommended

This product contains sensitive electrical components that may be damaged by electrical spikes, surges, electric shock, lighting strikes, etc. Use of surge protection systems is highly recommended in order to protect andextend the life of your equipment.

Table of Contents

1. Introduction.....1
2. Features.....2
3. Package Contents.....3
4. Specifications.....3
5. Operation Controls and Functions.....5
5.1. Front Panel.....5
5.2. Rear Panel.....6
6. Application Example.....7

1. Introduction

The HDMI 18Gbps Audio Extractor could extract audio signals from any HDMI compliant source to digital optical or analog stereo L/R audio outputs. For maximum flexibility, this audio extractor also supports bitstream audio down-mix to analog stereo output and keeps optical and HDMI out audio pass-through. Further, both input and output HDMI support video resolution up to 4K2K@50/60Hz (YUV444). It supports 10bits HDR (High Dynamic Range) pass through and HDMI high resolution digital audio formats bypass, LPCM 2CH, Dolby TrueHD, Dolby Digital Plus, Dolby Atmos and DTS-HD Master Audio, audio sampling rate up to 192 kHz. HDCP 2.2 and CEC bypass are supported.

Dolby Audio

Manufactured under license from Dolby Laboratories. Dolby and the double-D symbol are trademarks of Dolby Laboratories.

dts

For DTS patents, see http://patents.dts.com. Manufactured under license from DTS Licensing Limited. DTS, the Symbol, DTS and the Symbol together, and Digital Surround are registered trade-marks or trademarks of DTS, Inc. in the United States and/or other countries.
© DTS, Inc. All Rights Reserved.

2. Features

☆ HDMI 2.0b (18Gbps), HDCP 2.2 and DVI compliant
☆ Video resolutions up to 4K2K@50/60Hz (YUV444)
☆ Extract HDMI audio to multi-channel optical (SPDIF) or L/R analog audio
☆ HDMI Pass-through audio input to HDMI and optical audio output
☆ Support bitstream audio down-mix to L/R analog output
☆ Optical audio supports LPCM 2CH, Dolby Digital 2/5.1CH, DTS 2/5.1CH
☆ Support HDMI High Bit Rate(HBR) audio pass through
☆ Audio sample rates up to 192kHz
☆ 10bits HDR (High Dynamic Range) pass through
☆ Support CEC pass-through

3. Package Contents

- 1× HDMI 18Gbps Audio Extractor
- 1× 5V/1A Power Adapter
- 1× User Manual

4. Specifications

Technical	
HDMI Compliance	HDMI 2.0b
HDCP Compliance	HDCP 2.2 and HDCP 1.4
Video Bandwidth	18Gbps
Video Resolutions	Up to 4K2K@50/60Hz(YUV4:4:4), 4K2K@30Hz,1080P@120Hz, and 1080P 3D@60Hz
Color Space	RGB, YCbCr 4:4:4, YCbCr 4:2:2
Color Depth	10-bit, 12-bit
HDMI Audio Formats (Pass-through)	LPCM 2/5.1/7.1CH, Dolby Digital, DTS 5.1, Dolby Digital+, Dolby TrueHD, DTS-HD Master Audio, Dolby Atmos, DTS:X
Optical Audio Formats	LPCM 2CH, Dolby Digital 2/5.1 CH, DTS 2/5.1CH
L/R Audio Formats	Analog Stereo 2CH
ESD Protection	Human body model — ±8kV (air-gap discharge) & ±4kV (contact discharge)

Connections	
Inputs	1x HDMI Type A [19-pin female]
Outputs	1x HDMI Type A [19-pin female] 1x L/R Audio Out [RCA] 1x Optical Out [S/PDIF]
Mechanical	
Housing	Metal Enclosure
Color	Black
Dimensions	73.5mm[W] x 60.7mm[D] x 20mm[H]
Weight	135g
Power Supply	Input: AC100 - 240V 50/60Hz Output: DC 5V/1A (US/EU standards, CE/FCC/UL certified)
Power Consumption	1.25W (Max)
Operation Temperature	32 - 104°F / 0 - 40°C
Storage temperature	-4 - 140°F / -20 - 60°C
Relative Humidity	20 - 90% RH (no condensation)

5. Operation Controls and Functions

5.1 Front Panel

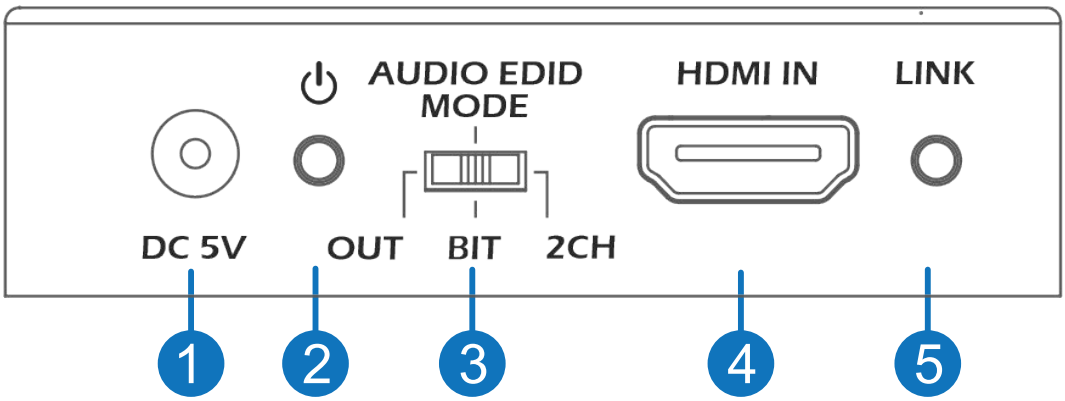

Number	Name	Function Description
1	DC 5V	Connect 5V/1A adapter to AC wall outlet for power supply.
2	Power LED	System power indicator.
3	OUT/BIT /2CH	The user allows to select audio format according to Copy TV, Bitstream or 2CH. OUT: Copy EDID from TV. BIT: Multi channel audio up to six channels. 2CH: 2 channel Stereo PCM.
4	HDMI IN	HDMI video input.
5	LINK LED	Red illuminate: PCM decoder or No signal Red blinking: Dolby decoder Green blinking: DTS decoder

5.2 Rear Panel

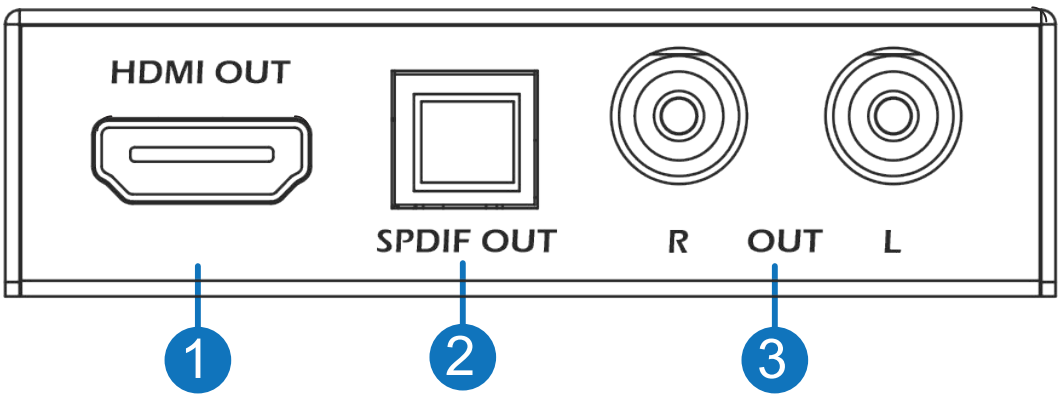

Number	Name	Function Description
1	HDMI OUT	HDMI output for display connectivity.
2	SPDIF Out	Toslink digital audio output (mirrors HDMI).
3	R/L OUT	Stereo RCA analog audio output.

6. Application Example

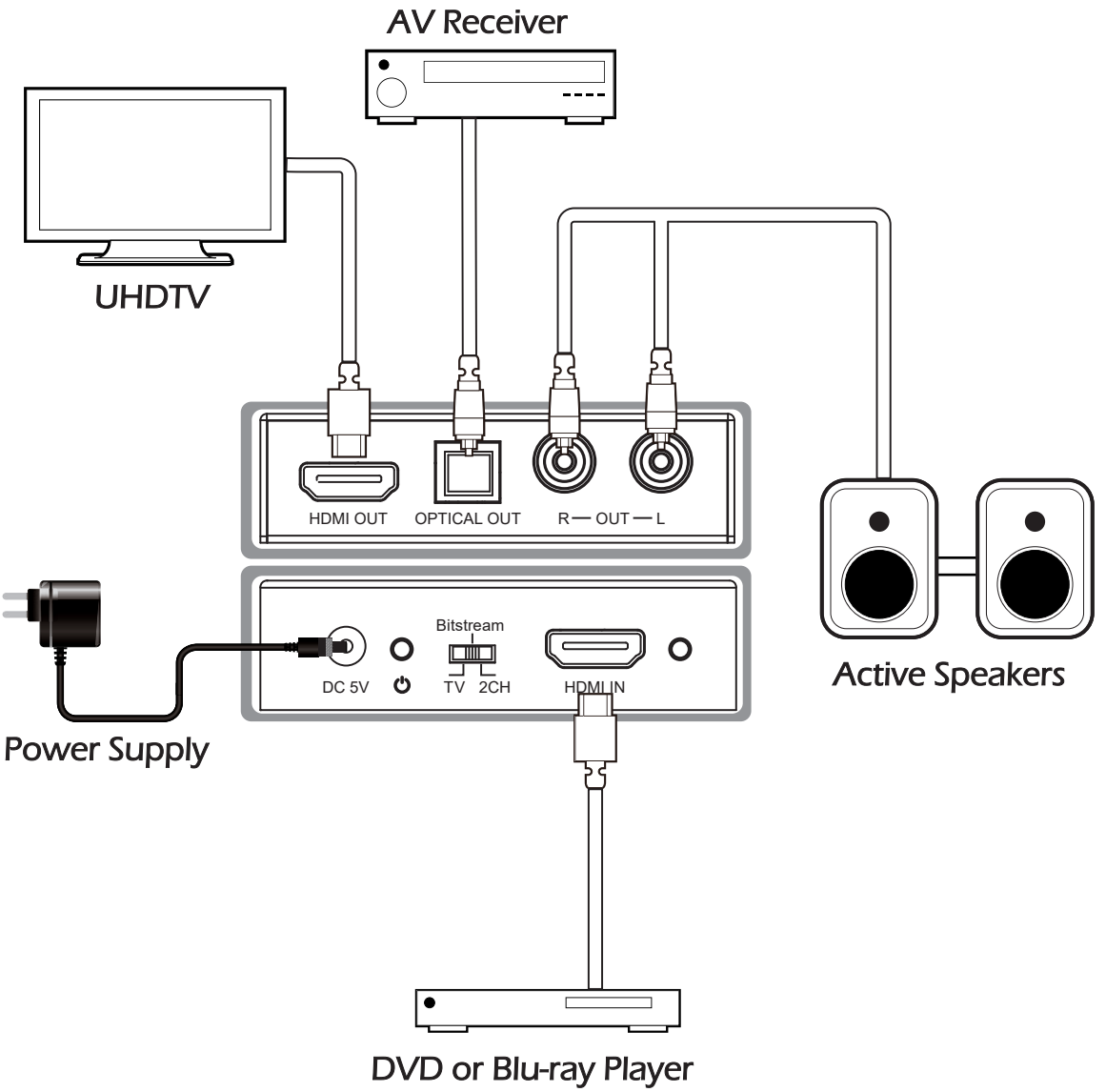

Quality Assurance

We have developed a strict quality assurance process and built a full-fledged testing laboratory. First-class high and low temperature laboratories, reliability and compatibility ensure that every product undergoes rigorous testing from design to delivery and is delivered free of defects.

After-sales service

We have established a complete after-sales warranty service system to respond to customer requirements in real time and quickly solve customer problems.

All trademarks are the property of their respective owners. ADERTECH is not responsible for any errors that may appear in this document. Product, pricing and feature information contained herein is subject to change without notice.

© 2023 ADERTECH Co Ltd.
The ADERTECH logo and associated visual identity are trademarks or registered trademarks of ADERTECH and/or its affiliates.