© | Technical data are subject to change without notice.

ADERTECH

TRIPLE-6

Outdoor Waterproof Wall-Mounted Speaker



User Manual

For black and white speakers

All trademarks are the property of their respective owners. ADERTECH is not responsible for any errors that may appear in this document publication. Product, pricing and feature information contained herein is subject to change without notice.

© 2023 ADERTECH Co Ltd. The ADERTECH logo and associated visual identity are trademarks or registered trademarks of ADERTECH and/or its affiliates.

Packing List

Component	Quantity
Wall-mounted speaker	1
Wall-mounting bracket	1
User manual	1

Technical Parameters

Frequency Response
(dB SPL, 1W, 1m)

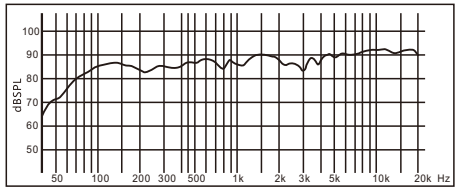

Distortion
(THD< 3% 1W, 1m, 100Hz-10kHz)

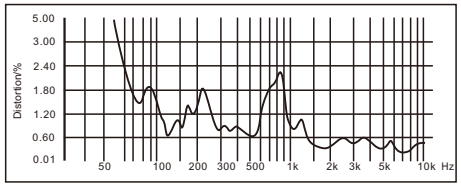

Vertical Directivity Pattern

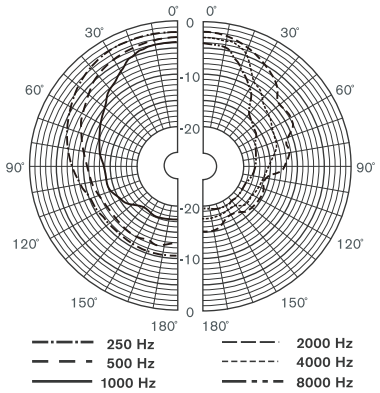

Horizontal Directivity Pattern

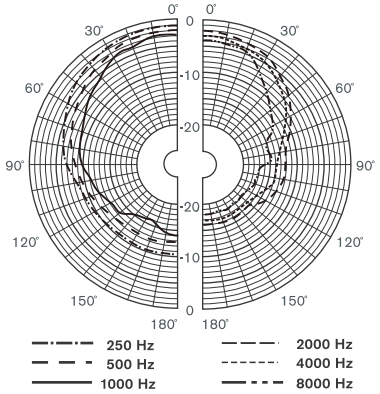

Technical Specifications

Indicator / Model	TRIPLE-6B (black)/ TRIPLE-6W (white)
Speaker Unit	6.5"×1, 1"×1
Operating Voltage	100V
Rated Power	50W
Power Adjustment	8Ω-50W-25W-12.5W-6.3W-3.2W
Frequency Response	65Hz-20kHz
Sensitivity (1m, 1W)	87dB±2dB
MAX. SPL. (1m)	104dB±2dB
Operating Temperature	-20℃~+50℃
Dimensions (H×W×D)	300×200×233mm
Net Weight (1PC)	4.3kg
Gross Weight (2PCS/CTN)	12kg

ADERTECH

Contents

Preface ---------- 1

Product Overview ---------- 1

Product Features ---------- 1

Material Features ---------- 1

Product Information ---------- 2

Installation and Wiring ---------- 3

Technical Parameters ---------- 7

Packing List ---------- 8

Preface

Thank you for choosing ADERTECH products. All products are strictly tested before leaving the factory, with guaranteed quality. The product is widely used in various places such as homes, villa communities, movie theaters, shopping malls and supermarkets, and is an ideal choice for you.
For better installation, commissioning and use of the product, please read this manual carefully before installation.

Product Overview

Product Features

- Specialized in sound quality, featuring a passive radiator and equipped with both tweeter and woofer units to deliver clear, transparent, and bright sound with rich, powerful bass.
- Streamlined design, smooth and elegant curves, stylish and classy outlook.
- Available in black and white, suitable for the decorative styles of different venues.

Material Features

Mesh: Made of 1060 pure aluminum, which is hardened and anti-oxidation treated, not easy to deform and never rust.
Speaker box: Made of polymer engineering plastics, durable, safe and reliable.
Speaker unit: The tweeter diaphragm is made of natural silk membrane;
the woofer diaphragm is made of polypropylene with large magnetic circuit.
Mounting bracket: Cast aluminum molding, no oxidation and rust, safe and durable, multi-angle adjustment, easy to install and use.
Waterproof level: IP66 waterproof level, all-weather design, to ensure the reliable use in indoor and outdoor environments.

ADERTECH

Wiring

① Open the waterproof cover on the back, unplug the terminal block, connect the audio cable (see the wiring diagram and audio terminal table), adjust the power tap to the desired gear, lock the cable and plug the terminal block, check whether it is connected securely, and then put the waterproof cover back.

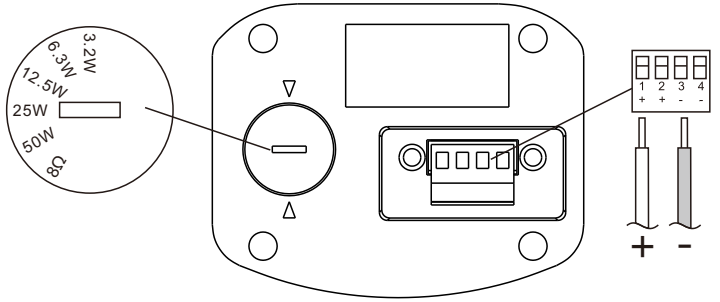

⚠ **Note: When the audio broadcast line input is constant voltage, it is prohibited to adjust the power tap to 8Ω.**

Power / Voltage / Terminal	100V	70V	8Ω
(+)---(-)	50W	25W	50W
	25W	12.5W	
	12.5W	6.3W	
	6.3W	3.2W	
	3.2W	1.5W	

Audio Terminal Table

② When connecting multiple speakers, refer to the wiring method below.

Terminal Block

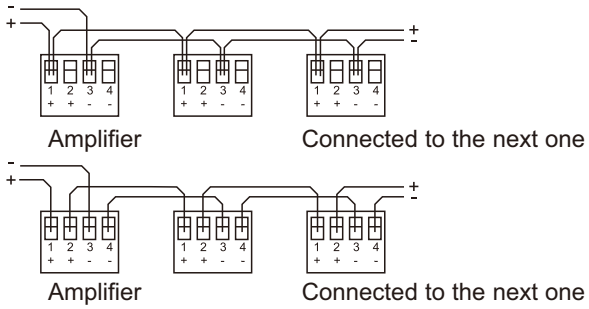

④ Assemble the speaker brackets 1,2, and 3 and check whether they are installed securely. The mounting bracket attached to the product can be adjusted to multiple angles, and can be installed either vertically or horizontally; adjust it to an appropriate angle according to the application scenario. (As shown in Figure 4)

⚠ Note: The passive radiation cone of the product needs to be kept 2cm away from the wall for safety.

Vertical Mounting

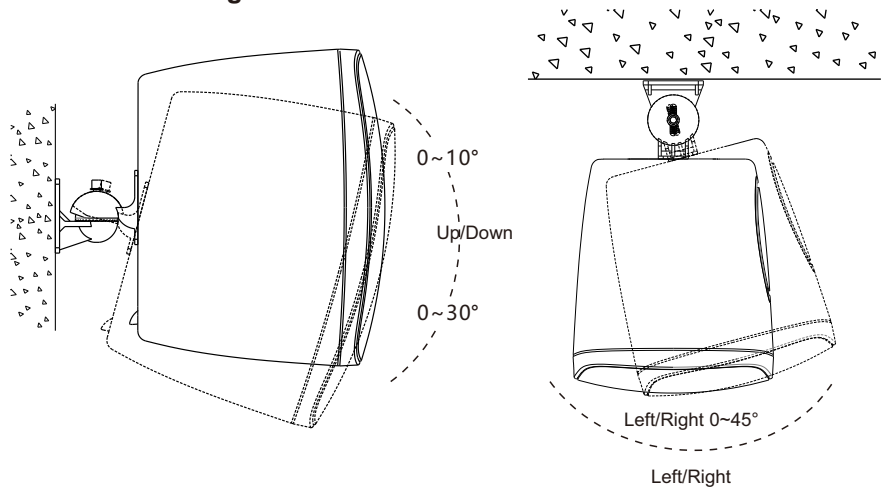

Horizontal Mounting

⚠ Note: When the speaker is mounted horizontally, it is recommended that the passive radiation cone be positioned downwards to minimize the accumulation of dust affecting the normal use of the product.

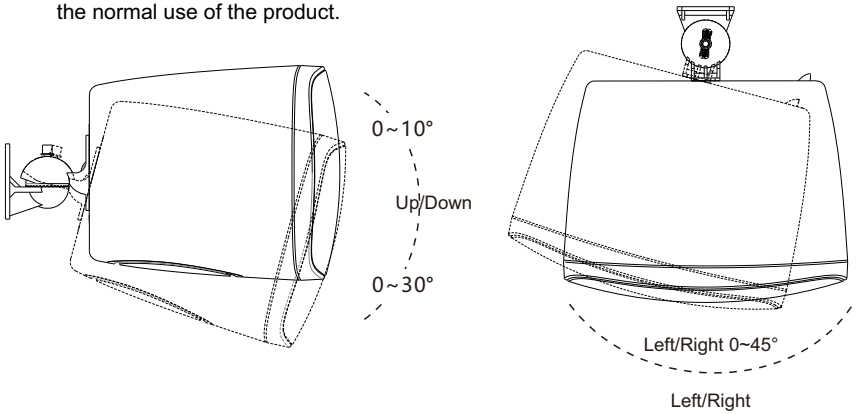

Product Information

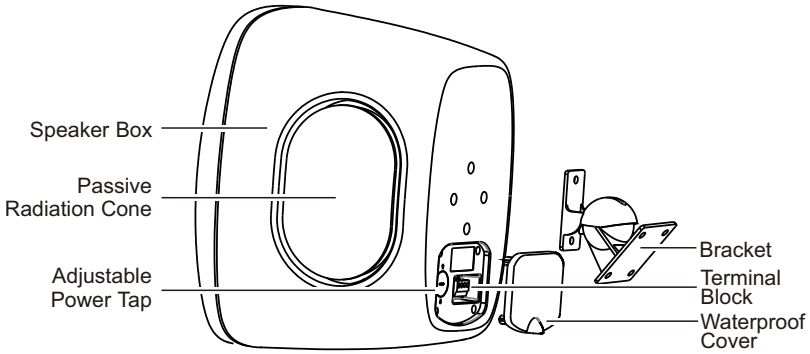

Product Breakdown Structure

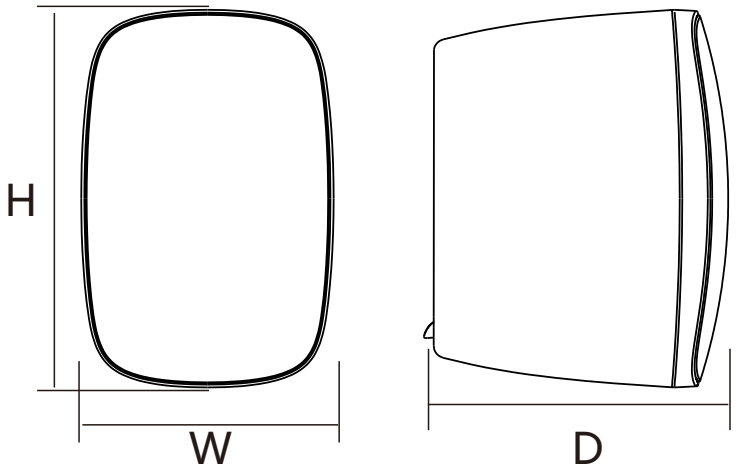

H	W	D
300	200	233

Product Dimensions (Unit: mm)

Installation and Wiring

Installation

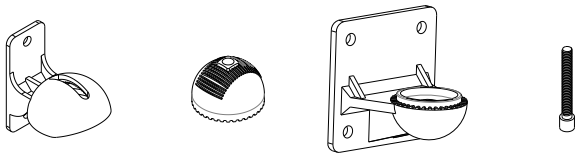

Bracket 1 Bracket 2 Bracket 3 Bracket Screw

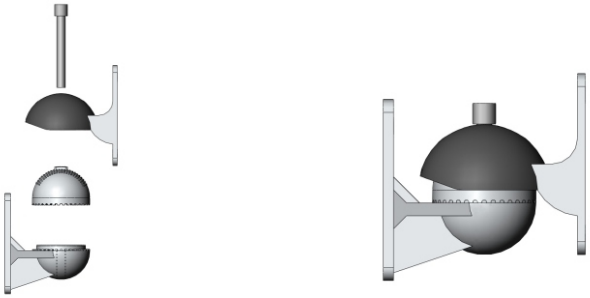

Bracket Accessaries

① Disassemble the mounting bracket into three parts: bracket 1, bracket 2 and bracket 3. Select a suitable and secure wall to install the M6 expansion bolts and fix the bracket 3 on the wall. (As shown in Figure 1)

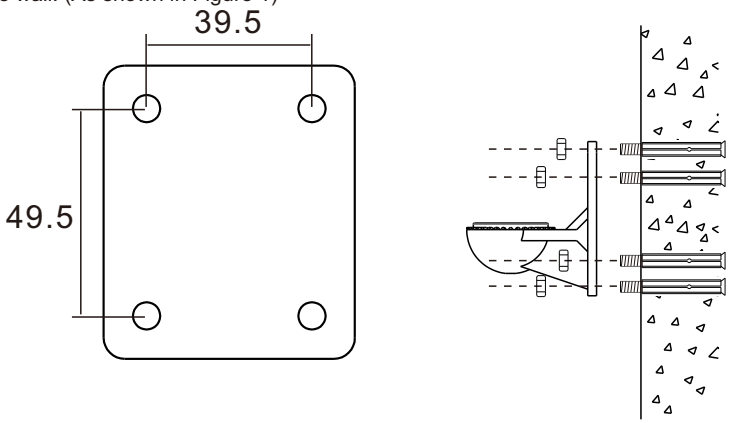

Figure 1

② Please use the M6 screws configured with the product to fix the bracket 1 on the speaker, and you can choose to mount the speaker vertically or horizontally as needed. (As shown in Figure 2)

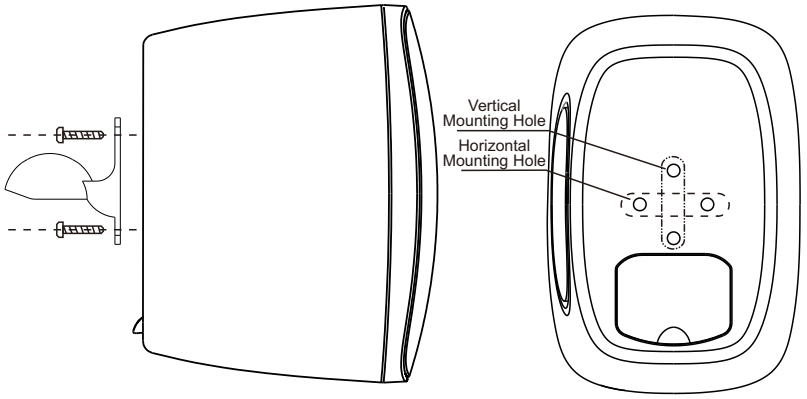

Figure 2

③ Combine the speaker brackets 1, 2, and 3 in order and tighten them with the bracket screw. (As shown in Figure 3)

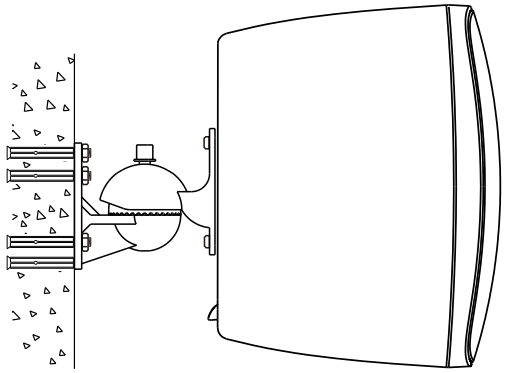

Figure 3