ADERTECH

H2BT-U4H-150UA





HDMI over HDBaseT 150 meters Extender
User Manual Version 1.1

Thank you for purchasing this product

We have done everything possible to ensure that our equipment pleases our consumers. When solving any problems in the operation and connection ADERTECH equipment, it is best to contact authorized companies and specialists who work with our equipment. Our equipment is intended for professional use, so you have professional skills in using such equipment. ADERTECH is a manufacturer of a wide range of multimedia solutions.

Surge protection device recommended

This product contains sensitive electrical components that may be damaged by electrical spikes, surges, electric shook, lighting strikes, etc. Use of surge protection systems is highly recommended in order to protect and extend the life of your equipment.

Table of Contents

1. Introduction.....1
2. Features.....1
3. Package Contents.....2
4. Specifications.....2
5. Operation Controls and Functions.....3
5.1. Transmitter Panel.....3
5.2. Receiver Panel.....5
5.3. IR Pin Definition.....7
6. Application Example.....9

1. Introduction

The 4K60 HDMI/USB 2.0 HDBT Extender can transmit HDMI high-definition signal, bidirectional IR control signal, bidirectional RS-232 control signal and USB 2.0 signal over CAT6 cable to the distance up to 328ft/100m (HBT mode) or 492ft/150m (LRM mode). Video resolution is up to 4K2K@60Hz (4:4:4). Transmitter supports audio embedding, and Receiver supports audio de-embedding. Audio pass-through is available when no video signal is transmitted. This product converts HDMI signal to standard HDBaseT signal and transmits it through LAN cable. It can easily control signal source device or display device from the remote end through bi-directional IR signal pass-through function. It supports EDID management (COPY TV/ Built-in) and POC function with POC control switch. The Extender can be widely used in other fields such as video conference system, multimedia signal broadcasting, HDMI signal extension, etc.

2. Features

☆ HDMI 2.0b and HDCP 2.2/1.x compliant
☆ Support video resolution up to 4K2K@60Hz (4:4:4), 18Gbps video bandwidth
☆ Up to 7.1 channels HD audio
☆ Built-in mode DIP switch for selecting the HBT mode or LRM mode HBT mode: Audio and video signals can be transmitted up to 328ft/100m for 4K60/4K30/1080P
LRM mode: Audio and video signals can be transmitted up to 492ft/150m for 4K30/1080
☆ Built-in EDID DIP switch supports intelligent EDID management
☆ Built-in audio DIP switch supports analog audio embedding
☆ Built-in POC switches, when both POC switches of TX and RX are turned on, the Extender supports bidirectional 24V POC function, that is, either TX or RX is powered by 24V1A power supply, the another does not need power supply from the DC jack. (See the Description 1)
☆ Transmit bidirectional Infrared control signal together with the HDMI signal. (See the Description 2)
IR IN is a 5V power supply level
☆ Transmit bidirectional RS-232 control signal together with the HDMI signal. (See the Description 3)
☆ Supports USB 2.0 signal transmission
☆ Compact design for easy and flexible installation

3. Package Contents

- 1 x 4K60 HDMI/USB 2.0 HDBT Extender
- 1 x HDBT Receiver
- 4 x 3pin-3.81mm Phoenix connector (male)
- 1 x Wideband IR Receiver cable (1.5 meters)
- 1 x IR Blaster cable (1.5 meters)
- 4 x Mounting Ears
- 8 x Machine Screws-M3*4
- 1 x 24V/1A Locking Power Supply
- 1 x User Manual

4. Specifications

Technical	
HDMI Compliance	HDMI 2.0b
HDCP Compliance	HDCP 2.2
Video Bandwidth	18Gbps
HDMI Video Resolution	Up to 4K2K@60Hz 4:4:4
Color Space	RGB 4:4:4, YCbCr 4:4:4, YCbCr 4:2:2, YCbCr 4:2:0
Color Depth	8/10/12bit
HDMI Audio Formats	LPCM 7.1CH, Dolby True HD and DTS-HD Master (Full format)
Analog Audio Embedding	48KHz
Transmission Distance	LRM mode: 492ft/150m (4K30/1080P) STD-HBT mode: 328ft/100m (4K60/4K30/1080P)
ESD Protection	Human body model—±8kV (Air-gap discharge) &±4kV (Contact discharge)
Connections	
Transmitter	Input: 1 x HDMI IN [Type A, 19-pin female] 1 x AUDIO IN [3.5mm Stereo Mini-jack] Output: 1 x HDMI OUT [Type A, 19-pin female] 1 x HDBT OUT [RJ45] Control: 1 x TO PC [USB Type B] 1 x RS-232 [3pin-3.81mm Phoenix connector] 1 x IR IN [3pin-3.81mm Phoenix connector] 1 x IR OUT [2pin-3.81mm Phoenix connector] 1 x SERVICE [Micro USB]
Receiver	Input: 1 x HDBT IN [RJ45] Output: 1 x HDMI OUT [Type A, 19-pin female] 1 x AUDIO OUT [3pin-3.81mm Phoenix connector] Control: 2 x USB 2.0 [USB Type A] 1 x RS-232 [3pin-3.81mm Phoenix connector] 1 x IR IN [3pin-3.81mm Phoenix connector] 1 x IR OUT [2pin-3.81mm Phoenix connector] 1 x SERVICE [Micro USB]

Mechanical	
Housing	Metal Enclosure
Color	Black
Dimensions	Transmitter/Receiver: 157.2mm [W] x 88mm [D] x 20mm [H]
Weight	Transmitter: 380g; Receiver: 377g
Power Supply	24V/1A (supporting bidirectional POC power supply)
Power Consumption	11.76W (Max)
Operating Temperature	32 - 104°F / 0 - 40°C
Storage Temperature	-4 - 140°F / -20 - 60°C
Relative Humidity	20 - 90% RH (no condensation)

5. Operation Controls and Functions

5.1 Transmitter panel

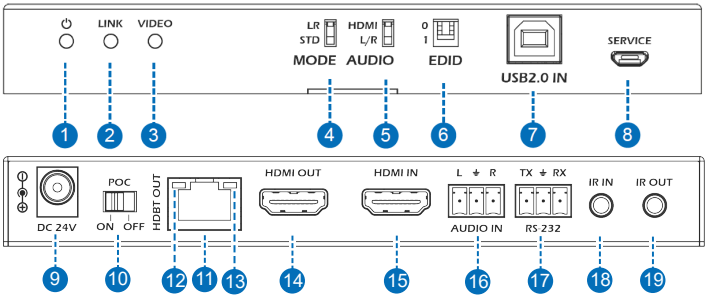

No.	Name	Function Description
1	Power LED	Red LED indicates that the Transmitter is powered on.
2	LINK LED (Green)	Link status indicator: ▪ Light on: Transmitter and Receiver are in good connection status. ▪ Light Flashing: Transmitter and Receiver are in poor connection status. ▪ Light off: Transmitter and Receiver are not
3	VIDEO LED (Green)	Signal indicator: ▪ Light Flashing: There is valid signal input. ▪ Light off: There is no signal or the signal is invalid.

No.	Name	Function Description
4	MODE DIP switch	Used to select the working mode: LRM-long reach mode: Extend the signal up to 492ft/150m through a single CAT6 network cable. STD-HBT mode: Extend the signal up to 328ft/100m through a single CAT6 network cable.
5	AUDIO IN DIP switch	Used to select the signal source for the audio output of Receiver: HDMI: Output the de-embedded audio from the HDMI IN port of Transmitter. L/R: Output the analog audio embedded from the AUDIO IN port of Transmitter.
6	EDID DIP Switch	Used to set the EDID information: 00 - Copy RX display's EDID (as factory default) 01 - 4K30 4:4:4 10 - 1080p60 4:4:4 11 - 1200p60 4:4:4
7	TO PC port	USB HOST port, connected to PC.
8	SERVICE port	Software update port. Send command "s switch uart 0!" to switch MCU; send command "s switch uart 1!"to switch VALENS.
9	DC 24V port	DC 24V/1A power input port. **NOTE: that the extender supports POC function, it means that either transmitter or receiver is powered on by 24V/1A power adapter, the other one doesn't need power supply.**
10	POC switch	Use the switch to turn on/off POC function.
11	HDBT OUT port	HDBaseT signal output port, connected to the HDBT IN port of Receiver with a CAT6 cable.
12	Link Signal Indicator (Green)	▪ Light on: Transmitter and Receiver are in good connection status ▪ Light Flashing: Transmitter and Receiver are in poor connection status. ▪ Light off: Transmitter and Receiver are not connected.
13	Data Signal Indicator (Yellow)	▪ Light Flashing: There is data transmission. ▪ Light off: There is no data transmission.
14	HDMI OUT port	HDMI loop output port, connected to HDMI display device such as TV or monitor. It loop output the audio and video signal of the HDMI IN port, and doesn't support audio embedding.

No.	Name	Function Description
15	HDMI IN port	HDMI signal input port, connected to HDMI source device, such as Blu-ray or PS4.
16	AUDIO IN port	Analog audio input port for audio embedding.
17	RS-232 port	Connected to PC or control system through 3-pin Phoenix connector for RS-232 serial command pass-through.
18	IR IN port	Connected to IR wideband receiver cable, receiving the remote control signal and then send it to the receiving end.
19	IR OUT port	Connected to IR blaster cable, sending the remote control signal from the receiving end.

5.2 Receiver panel

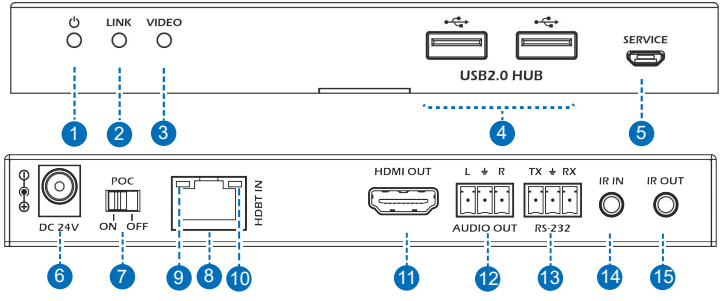

No.	Name	Function Description
1	Power LED	Red LED indicates that the Receiver is powered on.
2	LINK LED (Green)	Link status indicator: ▪ Light on: Transmitter and Receiver are in good connection status. ▪ Light Flashing: Transmitter and Receiver are in poor connection status. ▪ Light off: Transmitter and Receiver are not
3	VIDEO LED (Green)	Signal indicator: ▪ Light Flashing: There is valid signal input. ▪ Light off: There is no signal or the signal is invalid.
4	USB 2.0 port	USB Type A port for connecting USB 2.0 devices, such as USB Flash Drive, Mouse and Keyboard.

No.	Name	Function Description
5	SERVICE port	Software update port. Send command "s switch uart 0!" to switch MCU; send command "s switch uart 1!"to switch VALENS.
6	DC 24V port	DC 24V/1A power input port. **NOTE: that the extender supports POC function, it means that either transmitter or receiver is powered on by 24V/1A power adapter, the other one doesn't need power supply.**
7	POC switch	Use the switch to turn on/off POC function.
8	HDBT IN port	HDBaseT signal input port, connected to the HDBaseT OUT port of Transmitter with a CAT6 cable.
9	Link Signal Indicator (Green)	▪ Light on: Transmitter and Receiver are in good connection status. ▪ Light Flashing: Transmitter and Receiver are in poor connection status. ▪ Light off: Transmitter and Receiver are not connected.
10	Data Signal Indicator (Yellow)	▪ Light Flashing: There is data transmission. ▪ Light off: There is no data transmission.
11	HDMI OUT port	HDMI signal output port, connected to HDMI display device such as TV or monitor.
12	AUDIO OUT port	Analog audio output port.
13	RS-232 port	Connected to PC or control system through 3-pin Phoenix connector for RS-232 serial command pass-through.
14	IR IN port	Connected to IR wideband receiver cable, receiving the remote control signal and then send it to the transmitter.
15	IR OUT port	Connected to IR blaster cable, sending the remote control signal from the transmitting end.

5.3 IR Pin Definition

IR Receiver and Blaster pin's definition is as below:

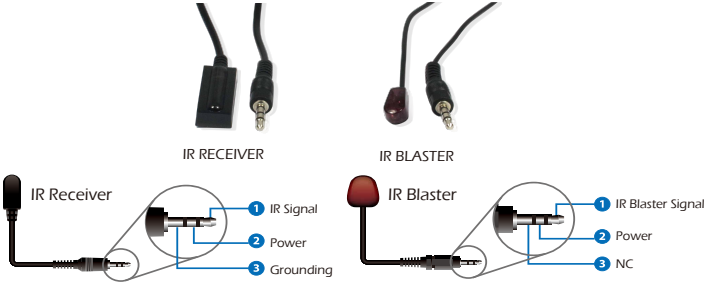

NOTE: When the angle between the IR receiver and the remote control is ± 45 °, the transmission distance is 0-5 meters. When the angle between the IR receiver and the remote control is ± 90 °, the transmission distance is 0-8 meters.

※ Description 1

POC (Power over Cable) Application Example

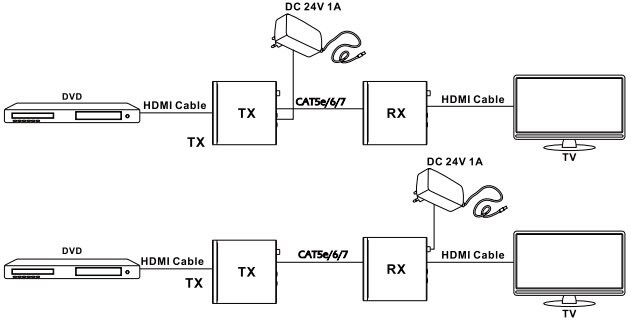

※ Description 2

Bidirectional Infrared control Application Example

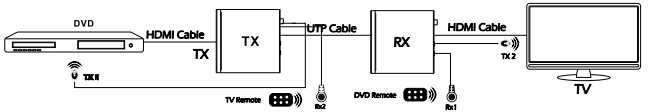

※ Description 3

Bidirectional RS-232 control Application Example

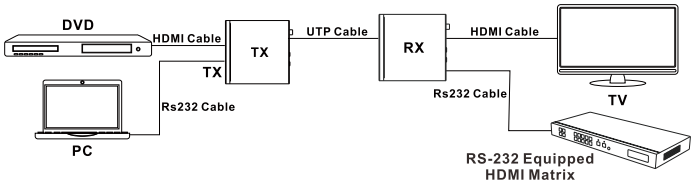

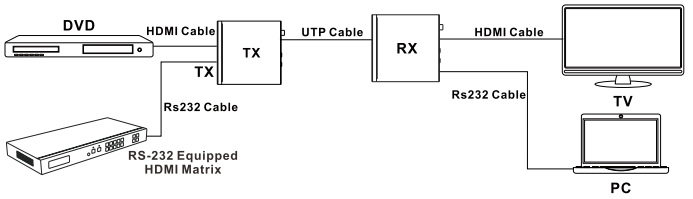

6. Application Example

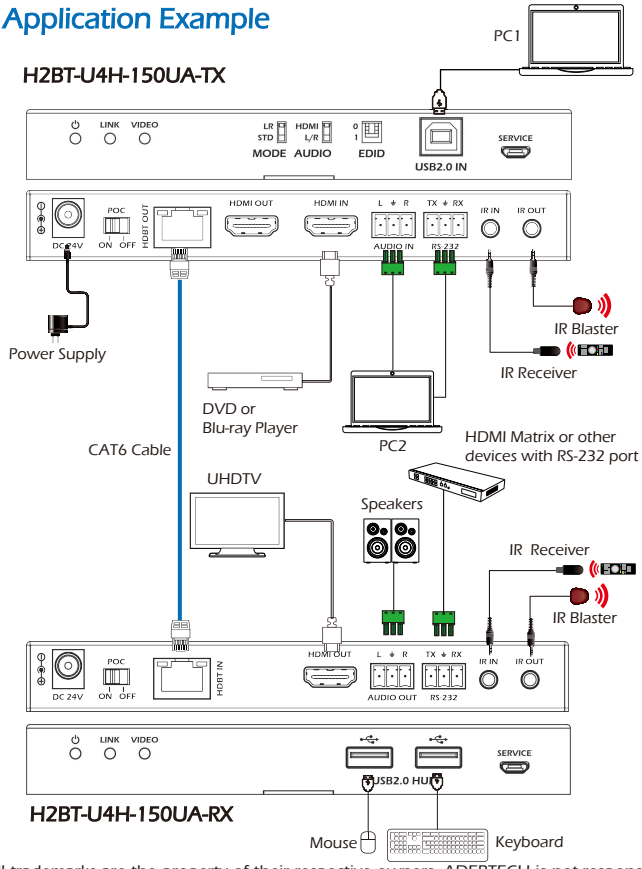

All trademarks are the property of their respective owners. ADERTECH is not responsible for any errors that may appear in this document publication. Product, pricing and feature information contained herein is subject to change without notice.
© 2023 ADERTECH-AV Co Ltd.
The ADERTECH logo and associated visual identity are trademarks or registered trademarks of ADERTECH and/or its affiliates.