adertech

User Manual



PAMP-4300
PAMP-4400

PROFESSIONAL AUDIO POWER AMPLIFIER

ANNOUNCEMENT

CAUTION

Installation

- Users can only connect this apparatus into the AC power socket which is indicated in this operation manual or shown on the specifications of the adapter. Otherwise it may cause fire or electric shock.
- DO NOT put this apparatus into water or expose them to moisture. Otherwise it may cause fire or electric shock.
- DO NOT put the container filled with liquid or small metallic items on this apparatus. Otherwise the spilled liquid or fallen of small metallic items into this apparatus may cause fire or electric shock.
- DO NOT put heavy weight (including this apparatus) on the power cord. Otherwise it may cause the damage of the power cord and lead to fire or electric shock. Specially noted that DO NOT put a heavy weight on the power cord covered by a carpet.

Operation

- DO NOT scratch, bend, twist, stretch or heat the power cord. Otherwise it may cause damage of power cord and even cause fire or electric shock.
- DO NOT open the cover of this apparatus. Otherwise it may cause electric shock. If you need inner overhaul, maintenance or repair, please contact the local distributor.
- Do not revamp the apparatus arbitrarily. Otherwise it may cause fire or electric shock.
- If there is a lighting and thunder strike, turn off the power of this apparatus as soon as possible and pull out the power cable's socket from the convenience receptacle.
- If there is a possibility of lighting, do not touch the power cable's plug when it is connected. Otherwise it may cause electric shock.

When exceptions occur during the process of operation:

- If the power cord is damaged (such as being cut or core wire is exposed), contact the local distributor and require for a new one. Keep using the damaged power cord may cause fire or electric shock.
- If this apparatus falls from height or the box is broken, turn off the power amplifier as soon as possible, and then pull out the plug from AC convenience receptacle. Contact the local distributor for maintenance. Failing to comply with this item and keeping using the broken apparatus may cause fire or electric shock.
- When finding out any problem, such as smoking, peculiar smell, noise, enter of foreign materials or liquid into the apparatus, turn off the power amplifier as soon as possible and pull out the power plug from the AC receptacle. Contact the local distributor for maintenance. Keep using this apparatus may cause fire or electric shock.

ATTENTION

- Avoid using this apparatus in the following situations:
  —exposed in the environment of splashing oil or steam, for example, near to the kitchen stove or humidifier, etc.
  —on the unstable surface, such as the shaky table top or oblique surface
  —exposed under the overheated environment, such as the inner space of a car with closed windows or the place under direct sunlight
  —exposed under the extreme moist or place with accumulated dust
- DO NOT place the power cable near the heat. Otherwise it may lead to melt or even fire.
- Grasp the head of plug when pulling out the power plug from AC receptacle. DO NOT drag the cable directly. Otherwise it may cause damage of the power cord and even fire or electric shock.
- DO NOT touch the power plug with wet hands. Otherwise it may cause electric shock.
- There are ventilation holes on the front and back of the amplifier in order to avoid the overheat inside. Do not block any ventilation holes. Otherwise it may cause fire. Pay a special attention to the followings:
  --DO NOT side lay or upend this apparatus.
  --DO NOT put this apparatus in the places of insufficient heat dissipation space, such as bookcase or closet(or wall mounted brackets)
  --DO NOT cover this apparatus with a tablecloth or put it on the carpet or bed.
  --Leave enough space around this apparatus so as to guarantee the normal heat dissipation. The heat dissipation space should be at least 10cm for two sides and the above.
  --If there is insufficient airflow, the inner temperature will warm up, which may lead to amplifier's faulty and even fire.
  --If users intent to move this apparatus, firstly unplug the power plug from the AC receptacle and then pull out all the connected cables. Otherwise it may cause damage of the cables and even fire or electric shock.
- Specialized cable can only be used when connecting the speaker with power amplifier. Otherwise it may cause fire.
- Before connecting this apparatus, turn off all the audio apparatus and speakers. Use the suitable cable and conduct the connection in accordance with the instructions.
- Before the power amplifier is turned on, do remember to turn the volume controller on the panel to the minimum first. Otherwise the burst of sound may cause hearing impairment.
- If this power amplifier is not used for a long-time, do remember to pull out the power plug from the AC receptacle. Otherwise it may cause fire.

Put all the accessories of this power amplifier (such as the machine legs, instruction manual and plastic bag) to the places where children can not reach.

Introduction

It saves approximately 40% power consumption and reduces the size of generators. Since lower RMS currents are reached during using, it reduces the cable sections. Less emissions on the cables because of lower harmonics of the mains frequency, which produces less hum and induced distortion because of perturbed mains. All in all, as the latest developed Class D amplifier, the promising quality has the characteristics of light weight, low heat, high efficiency, exquisite and crystal clear treble, rich mid frequency and clean bass. It works stably in the wide voltage ranges of AC 180-264V. Four layers circuitry designed is of independent R&D and reaches the leading level in the world.

Features

- High-efficient cooling system, infinitely variable speed cooing fan to make sure the operation is under an environment of lower temperature
- Independent R&D of SMPS of high quality to guarantee sufficient power supply
- Optional operation modes of STEREO, BRIDGE, PARALLEL
- Every channel has its own Signal and Clip indicator lights
- Thorough protection includes amplitude limiting, start up/shut down anti-shocking, DC protection, output short circuit and thermal protection

Testing Standards

-ICT Test
-High Voltage Test
-Grounding Test
-Advanced Vibration Test
-24-hour Loaded Aging Test
-Global Audio Standard-AP tests Complete Data

Functions of The Front Panel and Rear Panel

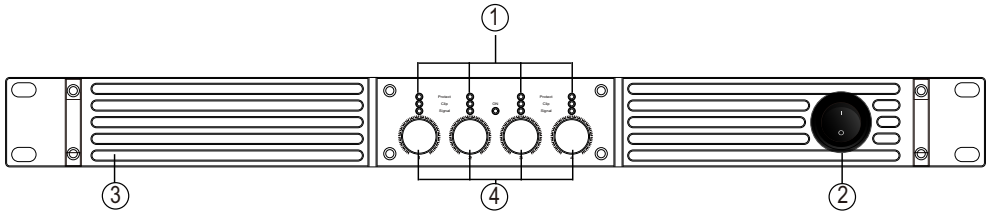

①LED indicator lights: ON, SIGNAL, CLIP, PROTECT
②Power switch
③Ventilation holes
④Volume controllers of CHA,CHB,CHC, and CHD

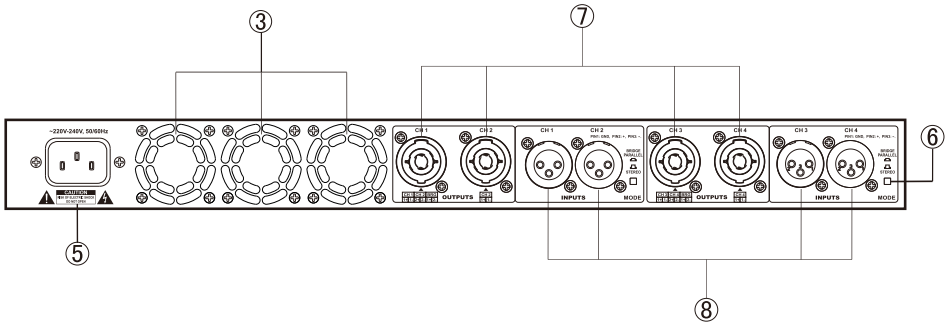

⑤ Power plug
⑥ Switch button to choose operation modes of STEREO,PARALLEL/BRIDGE
⑦ Output sockets: Speakon
⑧ Input sockets: Male&Female XLR

Operation Modes And Connection

There are three operation mode options: STEREO, BRIDGE and PARALLEL. Stir the DIP switch on the rear panel to choose.

1. Operation mode of STEREO

Turn off the power amplifier before connecting and set the volume control of each channel to minimum. Make sure the switch button is in the position as shown in the picture below to get the STEREO working mode. Connect the input and output wiring for both channels as shown below. Pay special attention to the polarity of the connection between the speaker and the amplifier.

Signal gets through from INPUT CH1 to OUTPUT CH1, INPUT CH2 to OUTPUT CH2, INPUT CH3 to OUTPUT CH3, INPUT CH4 to OUTPUT CH4.

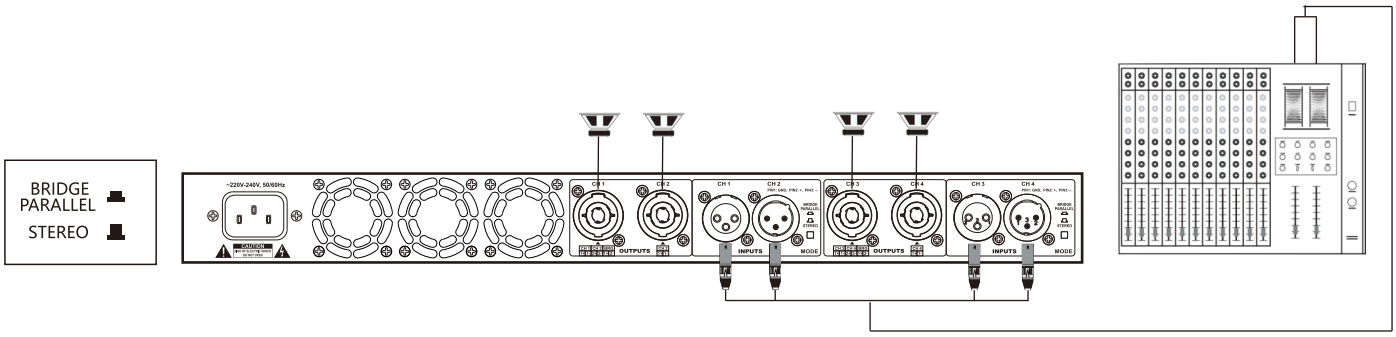

2. Operation mode of BRIDGE

The wiring of BRIDGE operation mode is typical.

Turn off the power amplifier before connecting and set the volume control of each channel to minimum. Make sure the switch button is in the position as shown in the picture below to get the BRIDGE working mode. Connect the input and output wiring for both channels as shown below. Pay special attention to the polarity of Speakon output sockets (1+, 2-).

Signal gets through from INPUT CH1 or INPUT CH2, INPUT CH3 or INPUT CH4, gets out from OUTPUT CH1 and OUTPUT CH3.

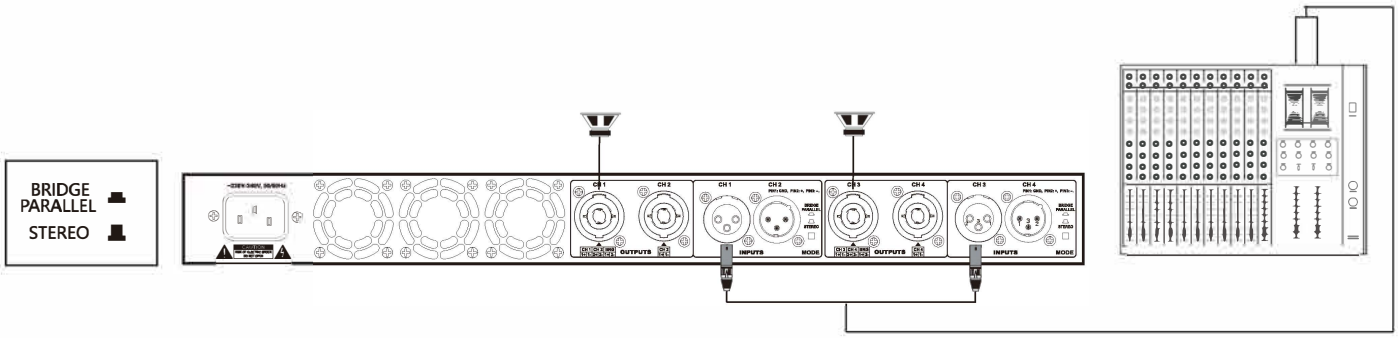

3. Operation mode of PARALLEL

The PARALLEL operation mode can send the same signal of one input channel to two output channels without extra wiring.

Turn off the power amplifier before connecting and set the volume control of each channel to minimum. Make sure the switch button is in the position as shown in the picture below to get the PARALLEL working mode. Connect the input and output wiring for both channels as shown below. Pay special attention to the polarity of the connection between the speaker and the amplifier.

Signal gets through from INPUT CH1 or INPUT CH2, gets out from OUTPUT CH1 and OUTPUT CH2; gets through from INPUT CH3 or INPUT CH4, gets out from OUTPUT CH3 and OUTPUT CH4.

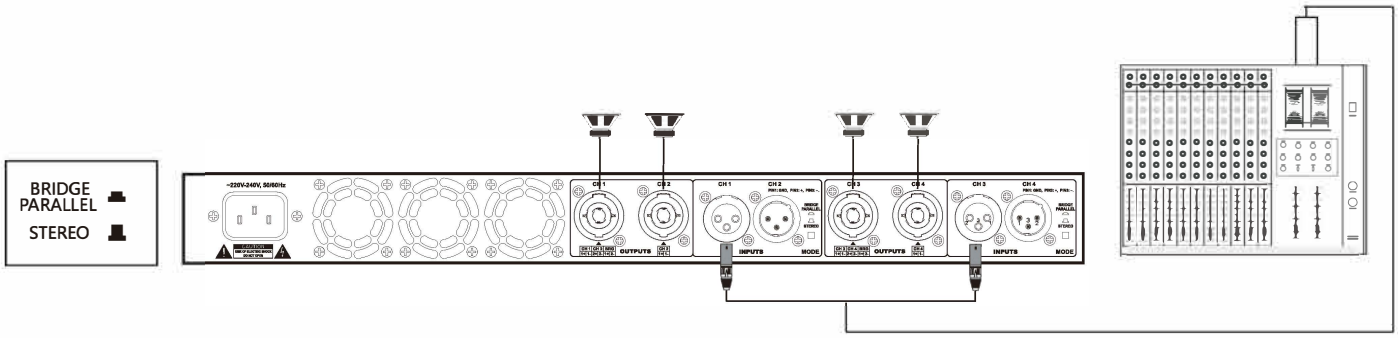

Attention

There are two yellow CLIP LED lights for each channels which indicates clipping. If CLIP light flickers, it indicates the signal has been clipped. When the power amplifier works normally, it is a formal phenomenon that the CLIP light flickers discontinuously. If the CLIP light flickers continuously for a long time, users should reduce the volume by turning the volume controllers on the front panel.

Specifications

MODEL	PAMP-4300	PAMP-4400
Rated Power(8Ω)	4x300W	4x400W
Rated Power(4Ω)	4x500W	4x650W
Rated Power(Bridge 8Ω)	2x900W	2x1200W
Frequency Response	15Hz-30kHz(±1dB)	
Damping Factor	> 240(1kHz,8Ω)	
Slew Rate	28V/μs	
Input Sensitivity	0.775V/1.0V/1.2V/1.4V	
THD+N	< 0.1%	
SNR	100dB	
Input Socket	Male & Female XLR	
Output Socket	Speakon	
Input Impedance	20kΩ Balance, 10kΩ Unbalance	
Power Supply	AC~200-240V/50-60Hz	
Voltage Range	AC~180-264V/50-60Hz	
Product Dimensions	(WxHxD)483mmx44mmx252mm	
Packing Size	(WxHxD)550mmx70mmx320mm	
Net/Gross Weight	5.1KG	5.9KG
Protection	amplitude limiting, start up/shut down anti-shocking, DC protection, output short circuit and thermal protection	

*STEREO 2Ω and BRIDGE 4Ω is prohibited!

Declaration: We reserve the right to change the design of any product from time to time without notice and with no obligation to make corresponding changes in products previously manufactured.

All trademarks are the property of their respective owners. ADERTECH is not responsible for any errors that may appear in this document.publication. Product, pricing and feature information contained herein is subject to change without notice.

© 2023 ADERTECH Co Ltd. The ADERTECH logo and associated visual identity are trademarks or registered trademarks of ADERTECH and/or its affiliates