ADERTECH

H3BT-U4H-70UA

18Gbps HDBaseT 3.0 Extender (70m) with USB2.0



User Manual

VER 1.0

Thank you for purchasing this product

We have done everything possible to ensure that our equipment pleases our consumers. When solving any problems in the operation and connection ADERTECH equipment, it is best to contact authorized companies and specialists who work with our equipment. Our equipment is intended for professional use, so you have professional skills in using such equipment. ADERTECH is a manufacturer of a wide range of multimedia solutions.

Surge protection device recommended

This product contains sensitive electrical components that may be damaged by electrical spikes, surges, electric shock, lighting strikes, etc. Use of surge protection systems is highly recommended in order to protect and extend the life of your equipment.

Table of Contents

1. Introduction.....1
2. Features.....1
3. Package Contents.....2
4. Specifications.....2
5. Operation Controls and Functions.....4
5.1 Transmitter Panel.....4
5.2 Receiver Panel.....6
6. IR Pin Definition.....7
7. Application Example.....8

1. Introduction

This 18Gbps HDBaseT 3.0 Extender can extend uncompressed HDMI signals, RS-232, bi-directional IR, and USB2.0 signals up to 230ft/70m (4K30/1080P) or 131ft /40m (4K60) via a single CAT6/6A cable. Video resolution is up to 4K2K@60Hz YUV 4:4:4. The Transmitter supports HDMI input and audio de-embedding. The Receiver supports HDMI output and audio de-embedding. The Extender supports bi-directional RS-232 and IR signal pass-through, EDID management, USB2.0 signal transmission and bi-directional POC function. The Extender offers the most convenient solution for HDMI extension via a single CAT cable with long distance capability, and it is the perfect solution for home/commercial application.

2. Features

☆ HDMI 2.0b and HDCP 2.2 compliant
☆ Support 18Gbps video bandwidth
☆ Support video resolution up to 4K2K@60Hz (YUV 4:4:4)
☆ HDR, HDR10, HDR10+, Dolby Vision LLM and HLG pass through
☆ LPCM, Dolby Digital/Plus/EX, Dolby True HD, DTS, DTS-EX, DTS-96/24, DTS High Res, DTS-HD Master Audio, DSD pass through
☆ Transmission distance up to 230ft/70m (4K30/1080P) or 131ft/40m (4K60) via a single CAT6/6A cable
☆ Support bi-directional POC (Power over Cable), when TX or RX gets power, the other end does not need an external power supply
☆ Support 3.5mm analog audio de-embedding at TX and RX
☆ EDID management
☆ Support bi-directional RS-232 signal pass-through, bi-directional IR signal control, USB2.0 signal transmission
☆ Compact design for easy and flexible installation

3. Package Contents

① 1 × HDBaseT 3.0 Extender (Transmitter)
② 1 × HDBaseT 3.0 Extender (Receiver)
③ 1 × IR Blaster Cable (1.5 meters)
④ 1 × IR Receiver Cable (1.5 meters)
⑤ 2 × 3pin-3.81mm Phoenix Connectors (Male)
⑥ 4 × Mounting Ears
⑦ 8 × Machine Screws (KM3*4)
⑧ 1 × 24V/1A Locking Power Adapter
⑨ 1 × User Manual

4. Specifications

Technical	
HDMI Compliance	HDMI 2.0b
HDCP Compliance	HDCP 2.2
Video Bandwidth	18Gbps
Video Resolution	Up to 4K@60Hz
HDR	HDR, HDR10, HDR10+, Dolby Vision, HLG
Color Space	RGB, YCbCr 4:4:4, YCbCr 4:2:2, YCbCr 4:2:0
Color Depth	8/10/12-bit
Audio Formats	LPCM, Dolby Digital/Plus/EX, Dolby True HD, DTS, DTS-EX, DTS-96/24, DTS High Res, DTS-HD Master Audio, DSD
IR Level	12Vp-p
Transmission Distance	4K60 / 40m; 4K30 / 70m; 1080P / 70m (CAT6/6A cable)

Connection	
Transmitter	Input: 1 × HDMI IN [Type A, 19-pin female] Outputs: 1 × HDBaseT OUT [RJ45 connector] 1 × L/R OUT [3.5mm Stereo Mini-jack] Controls: 1 × IR IN [3.5mm Stereo Mini-jack] 1 × IR OUT [3.5mm Stereo Mini-jack] 1 × RS-232 [3pin-3.81mm Phoenix jack] 1 × SERVICE [Micro USB, 5-pin female] 1 × USB HOST [USB Type B] 2 × USB DEVICES [USB Type A]
Receiver	Input: 1 × HDBaseT IN [RJ45, 8-pin female] Outputs: 1 × HDMI OUT [Type A, 19-pin female] 1 × L/R OUT [3.5mm Stereo Mini-jack] Controls: 1 × IR IN [3.5mm Stereo Mini-jack] 1 × IR OUT [3.5mm Stereo Mini-jack] 1 × RS-232 [3pin-3.81mm Phoenix jack] 1 × SERVICE [Micro USB, 5-pin female] 2 × USB DEVICES [USB Type A]
Mechanical	
Housing	Metal Enclosure
Color	Black
Dimensions	Transmitter / Receiver: 144mm [W] x 78mm [D] x 23mm [H]
Weight	Transmitter: 323g, Receiver: 319g
Power Supply	Input: AC 100 - 240V 50/60Hz Output: DC 24V/1A (US/EU standard, CE/FCC/UL certified)
Power Consumption	14.28W (POC)
Operating Temperature	32 - 104°F / 0 - 40°C
Storage Temperature	-4 - 140°F / -20 - 60°C
Relative Humidity	20 - 90% RH (no condensation)

5. Operation Controls and Functions

5.1 Transmitter Panel

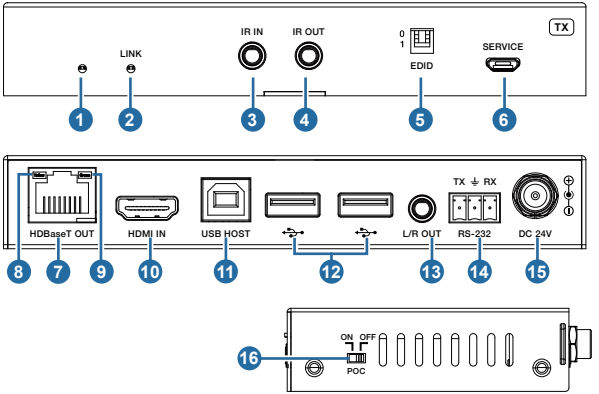

No.	Name	Function Description
1	Power LED	Red LED indicates that the Transmitter is powered on.
2	LINK LED	▪ Light on: Transmitter and Receiver are in good connection status. ▪ Light flashing: Transmitter and Receiver are in poor connection status or connected to the same device. ▪ Light off: Transmitter and Receiver are not connected.
3	IR IN	IR signal input port, connected to IR Receiver cable.
4	IR OUT	IR signal output port, connected to IR Blaster cable.
5	EDID DIP switch	Used for EDID setting: 00- Copy display's EDID (as factory default) 01- 4K30 4:4:4 10- 1080p60 4:4:4 11- 1200p60 4:4:4
6	SERVICE	Firmware update port.

7	HDBaseT OUT	HDBaseT output port, connected to the HDBaseT IN port of Receiver with a CAT6/6A cable. It is used for various signals pass-through.
8	Data Signal Indicator (Yellow)	▪ Illuminating: HDMI signal with HDCP. ▪ Flashing: HDMI signal without HDCP. ▪ Dark: No HDMI signal.
9	Link Signal Indicator (Green)	▪ Illuminating: Transmitter and Receiver are in good connection status. ▪ Flashing: Transmitter and Receiver are in poor connection status or connected to the same device. ▪ Dark: Transmitter and Receiver are not connected.
10	HDMI IN	HDMI signal input port, connected to signal source device.
11	USB HOST	USB extension host port, connected to PC.
12	USB DEVICES	Two USB device ports, connected to U disk, mouse or keyboard.
13	L/R OUT	Analog audio output port, used for audio de-embedding output.
14	RS-232	RS-232 serial port, used for serial port command transmission.
15	DC 24V	DC 24V/1A power supply input port. *Note that the extender supports POC function, it means that either transmitter or receiver is powered on by 24V/1A power adapter, the other one doesn't need power supply.*
16	POC switch	Use the switch to turn on/off POC function.

5.2 Receiver Panel

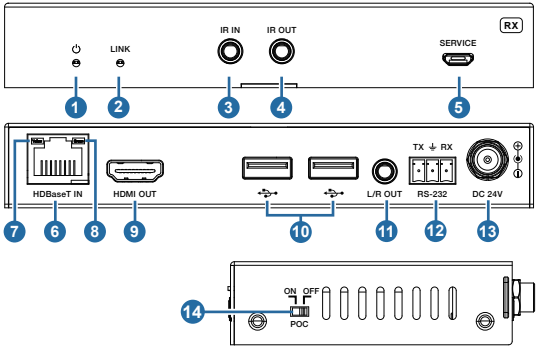

No.	Name	Function Description
1	Power LED	Red LED indicates that the Receiver is powered on.
2	LINK LED	▪ Light on: Transmitter and Receiver are in good connection status. ▪ Light flashing: Transmitter and Receiver are in poor connection status or connected to the same device. ▪ Light off: Transmitter and Receiver are not connected.
3	IR IN	IR signal input port, connected to IR Receiver cable.
4	IR OUT	IR signal output port, connected to IR Blaster cable.
5	SERVICE	Firmware update port.
6	HDBaseT IN	HDBaseT input port, connected to the HDBaseT OUT port of Transmitter with a CAT6/6A cable. It is used for various signals pass-through.
7	Data Signal Indicator (Yellow)	▪ Illuminating: HDMI signal with HDCP. ▪ Flashing: HDMI signal without HDCP. ▪ Dark: No HDMI signal.
8	Link Signal Indicator (Green)	▪ Illuminating: Transmitter and Receiver are in good connection status. ▪ Flashing: Transmitter and Receiver are in poor connection status or connected to the same device. ▪ Dark: Transmitter and Receiver are not connected.
9	HDMI OUT	HDMI signal output port, connected to HDMI display device.
10	USB DEVICES	Two USB device ports, connected to U disk, mouse or keyboard.

No.	Name	Function Description
11	L/R OUT	Analog audio output port, used for audio de-embedding output.
12	RS-232	RS-232 serial port, used for serial port command transmission.
13	DC 24V	DC 24V/1A power supply input port. *Note that the extender supports POC function, it means that either transmitter or receiver is powered on by 24V/1A power adapter, the other one doesn't need power supply.*
14	POC switch	Use the switch to turn on/off POC function.

6. IR Pin Definition

IR Receiver and Blaster pin's definition as below:

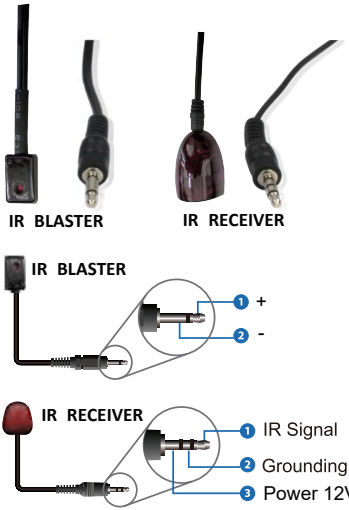

Note: When the angle between the IR receiver and the remote control is ± 45 °, the transmission distance is 0-5 meters; when the angle between the IR receiver and the remote control is ± 90 °, the transmission distance is 0-8 meters.

7. Application Example

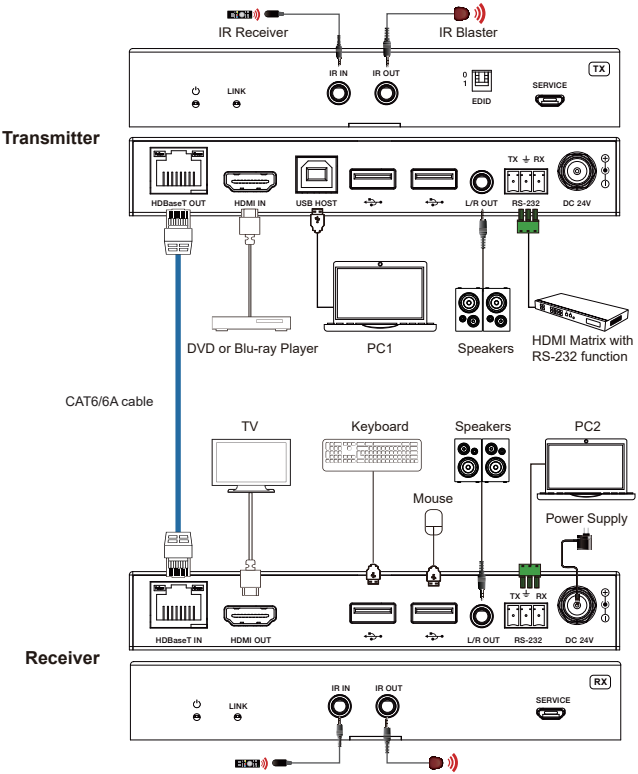

All trademarks are the property of their respective owners. ADERTECH is not responsible for any errors that may appear in this document.publication. Product, pricing and feature information contained herein is subject to change without notice.
© 2023 ADERTECH Co Ltd. The ADERTECH logo and associated visual identity are trademarks or registered trademarks of ADERTECH and/or its affiliates